SONY®

HD OPTICAL FIBER RECEIVER

HDFR-300

SONY
OPTICAL FIBER RECEIVER HDFR-300
HDVS

HDVS

OPERATION AND MAINTENANCE MANUAL

1st Edition (Revised 3)
Serial No. 10001 and Higher

SAFETY RELATED COMPONENT WARNING

Components identified by shading and ⚠ marked on the schematic diagrams and parts list are critical to safe operation. Replace these components with SONY parts whose part numbers appear as shown in this manual or in supplements published by SONY.

Warning—This equipment generates, uses, and can radiate radio frequency energy and if not installed and used in accordance with the instructions manual, may cause interference to radio communications. It has been tested and found to comply with the limits for a Class A computing device pursuant to Subpart J of Part 15 of FCC Rules, which are designed to provide reasonable protection against such interference when operated in a commercial environment. Operation of this equipment in a residential area is likely to cause interference in which case the user at his own expense will be required to take whatever measures may be required to correct the interference.

Important—To insure that the complete system (including this peripheral) is capable of complying with the FCC requirements, it is recommended that the user make sure that the individual equipment of the complete system has a label with one of the following statements.
"This equipment has been tested with a Class A Computing Device and has been found to comply with Part 15 of FCC rules."
—or—
"This equipment complies with the requirements in Part 15 of FCC rules for a Class A Computing Device."
—or equivalent.

The shielded interface cable recommended in this manual must be used with this equipment in order to comply with the limits for a computing device pursuant to Subpart J of Part 15 of FCC rules.

WARNING:
Changing the voltage selector may require the use of a different line cord or attachment plug, or both.
To reduce the risk of fire or electric shock, refer servicing to qualified service personnel.

For the customers in Canada

This apparatus complies with the Class A limits for radio noise emissions set out in Radio Interference Regulations.

Pour les utilisateurs au Canada

Cet appareil est conforme aux normes Classe A pour bruits radioélectriques, spécifiés dans le Règlement sur le brouillage radioélectrique.

このマニュアルに記載されている事柄の著作権は当社にあり，説明内容は機器購入者の使用を目的としています。
従って，当社の許可なしに無断で複写したり,説明内容(操作，保守等）と異なる目的で本マニュアルを使用することを禁止します。

The material contained in this manual consists of information that is the property of Sony Corporation and is intended solely for use by the purchasers of the equipment described in this manual.
Sony Corporation expressly prohibits the duplication of any portion of this manual or the use thereof for any purpose other than the operation or maintenance of the equipment described in this manual without the express written permission of Sony Corporation.

Le matériel contenu dans ce manuel consiste en informations qui sont la propriété de Sony Corporation et sont destinées exclusivement à l'usage des acquéreurs de l'équipement décrit dans ce manuel.
Sony Corporation interdit formellement la copie de quelque partie que ce soit de ce manuel ou son emploi pour tout autre but que des opérations ou entretiens de l'équipement à moins d'une permission écrite de Sony Corporation.

Das in dieser Anleitung enthaltene Material besteht aus Informationen, die Eigentum der Sony Corporation sind, und ausschließlich zum Gebrauch durch den Käufer der in dieser Anleitung beschriebenen Ausrüstung bestimmt sind.
Die Sony Corporation untersagt ausdrücklich die Vervielfältigung jeglicher Teile dieser Anleitung oder den Gebrauch derselben für irgendeinen anderen Zweck als die Bedienung oder Wartung der in dieser Anleitung beschriebenen Ausrüstung ohne ausdrückliche schriftliche Erlaubnis der Sony Corporation.

Bescheinigung des Herstellers

Hiermit wird bescheinigt, daß der HD-Fiberglaskabel-Empfänger HDFR-300 in Übereinstimmung mit den Bestimmungen der Amtsblattverfügung Nr.1046/1984 funkentstört ist.
Der Deutschen Bundespost wurde das Inverkehrbringen dieses Gerätes angezeigt und die Berechtigung zur Überprüfung der Serie auf Einhaltung der Bestimmungen eingeräumt. Sony Corporation

Hinweis

Gemäß dem Amtsblatt des Bundesministers für das Post- und Fernmeldewesen Nr.163/1984 wird der Betreiber darauf aufmerksam gemacht, daß die von ihm mit diesem Gerät zusammengestellte Anlage auch den technischen Bestimmungen dieses Amtsblattes genügen muß.

SAFETY CHECK-OUT

After correcting the original service problem, perform the following safety checks before releasing the set to the customer:

Check the metal trim, "metallized" knobs, screws, and all other exposed metal parts for AC leakage. Check leakage as described below.

LEAKAGE TEST

The AC leakage from any exposed metal part to earth ground and from all exposed metal parts to any exposed metal part having a return to chassis, must not exceed 3.5 mA. Leakage current can be measured by any one of three methods.

1. A commercial leakage tester, such as the Simpson 229 or RCA WT-540A. Follow the manufacturers' instructions to use these instruments.
2. A battery-operated AC milliammeter. The Data Precision 245 digital multimeter is suitable for this job.
3. Measuring the voltage drop across a resistor by means of a VOM or battery-operated AC voltmeter. The "limit" indication is 5.25 V, so analog meters must have an accurate low-voltage scale. The Simpson 250 and Sanwa SH-63Trd are examples of a passive VOM that is suitable. Nearly all battery operated digital multimeters that have a 20 V AC range are suitable. (See Fig. A)

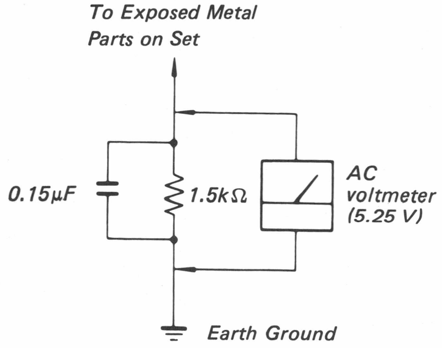

Fig. A. Using an AC voltmeter to check AC leakage.

目 次
TABLE OF CONTENTS

1. 取り扱い操作

1-1. 概要 .... 1-1 (J)
1-2. 各部の名称と働き .... 1-3 (J)
1-3. 接続 .... 1-12 (J)
1-4. 操作 .... 1-16 (J)
1-5. 光コネクターのクリーニング .... 1-17 (J)
1-6. 主な仕様 .... 1-18 (J)

1. OPERATION

1-1. Overview .... 1-1 (E)
1-2. Location and Function of Parts .... 1-3 (E)
1-3. Connections .... 1-10 (E)
1-4. Operation .... 1-14 (E)
1-5. Optical Connector Cleaning .... 1-15 (E)
1-6. Specifications .... 1-16 (E)

2. 設置

2-1. 開梱と再梱包 .... 2-1 (J)
2-2. 標準付属品 .... 2-2 (J)
2-3. 適合コネクター/ケーブル .... 2-3 (J)
  2-3-1. コネクターの入出力信号 .... 2-3 (J)
  2-3-2. 接続コネクター .... 2-4 (J)
  2-3-3. HDCCコネクターの外し方 .... 2-5 (J)
  2-3-4. ケーブルの結線 .... 2-6 (J)
2-4. 設置 .... 2-7 (J)
  2-4-1. 設置環境 .... 2-7 (J)
  2-4-2. 外形寸法 .... 2-7 (J)
  2-4-3. 19インチラックマウント .... 2-8 (J)
  2-4-4. 付属ハーネス (ANALOG-2) の交換方法 .... 2-9 (J)
2-5. 基板内スイッチの設定 .... 2-10 (J)
2-6. 接続図 .... 2-11 (J)

2. INSTALLATION

2-1. Unpacking and Repacking .... 2-1 (E)
2-2. Supplied Accessories .... 2-2 (E)
2-3. Connectors/Cable .... 2-3 (E)
  2-3-1. Connector Input/Output signals .... 2-3 (E)
  2-3-2. Connector .... 2-4 (E)
  2-3-3. Removal of the HDCC Connectors .... 2-5 (E)
  2-3-4. Cable wiring .... 2-6 (E)
2-4. Installation .... 2-7 (E)
  2-4-1. Installation Conditions .... 2-7 (E)
  2-4-2. Dimensions .... 2-7 (E)
  2-4-3. 19-inch Rack Mount .... 2-8 (E)
  2-4-4. Replacement of Supplied Harness (ANALOG-2) .... 2-9 (E)
2-5. Function of Switches on PC Board .... 2-10 (E)
2-6. System Configuration .... 2-11 (E)

3. サービスインフォメーション

3-1. 基板配置図 .... 3-1 (J)
3-2. 主要部品の交換方法 .... 3-2 (J)
  3-2-1. トップパネルの取り外し .... 3-2 (J)
  3-2-2. 電源ユニットの取り外し .... 3-2 (J)
  3-2-3. コネクターパネルの取り外し .... 3-3 (J)
  3-2-4. CCUコネクターの交換方法 .... 3-4 (J)
  3-2-5. OPTICALコネクターの交換方法 .... 3-5 (J)
3-3. 点検および保守 .... 3-6 (J)
  3-3-1. OPTICALコネクターのクリーニング .... 3-6 (J)
3-4. サービス上の注意事項 .... 3-7 (J)
  3-4-1. 光ファイバーコードの取り扱い上の注意事項 .... 3-7 (J)
  3-4-2. 電源ユニットの注意事項 .... 3-7 (J)
  3-4-3. チップ部品交換時の注意事項 .... 3-8 (J)
  3-4-4. PROM IC .... 3-9 (J)
  3-4-5. 補修用部品の注意事項 .... 3-9 (J)

3. SERVICE INFORMATION

3-1. Board Layout .... 3-1 (E)
3-2. Replacement of Main Parts .... 3-2 (E)
  3-2-1. Removal of Top Panel .... 3-2 (E)
  3-2-2 Removal of Power Supply Unit .... 3-2 (E)
  3-2-3. Removal of Connector Panel .... 3-3 (E)
  3-2-4. Replacement of CCU Connector .... 3-4 (E)
  3-2-5. Replacement of OPTICAL Connector .... 3-5 (E)
3-3. Periodic Check and Maintenance .... 3-6 (E)
  3-3-1. Optical Connector Cleaning .... 3-6 (E)
3-4. Servicing Precautions .... 3-7 (E)
  3-4-1. Optical Fiber Cord Handling .... 3-7 (E)
  3-4-2. Power Supply Unit .... 3-7 (E)
  3-4-3. Precaution on Replacement of Chip Parts .... 3-8 (E)
  3-4-4. PROM IC .... 3-9 (E)
  3-4-5. Precaution of Replacement Parts .... 3-9 (E)

4. 調整要項

4-1. 準備 .... 4-1 (J)
  4-1-1. 使用機器 .... 4-1 (J)
  4-1-2. 接続 .... 4-2 (J)
  4-1-3. 注意事項 .... 4-3 (J)
4-2. 調整項目 .... 4-3 (J)
  4-2-1. 電源調整 (PS-228基板) .... 4-4 (J)
  4-2-2. +9 V調整 (VA-99基板) .... 4-5 (J)
  4-2-3. SYNC CLAMP LEVEL調整 (VA-99基板) .... 4-6 (J)
  4-2-4. +9 V調整 (OTX-11基板) .... 4-7 (J)
  4-2-5. +9 V調整 (ORX-11基板) .... 4-8 (J)
  4-2-6. OPT G/B/R周波数特性調整 (ORX-11基板) .... 4-9 (J)
  4-2-7. AUDIO周波数特性調整 (ORX-11基板) .... 4-10 (J)
  4-2-8. G/B/R信号レベル調整 (VA-99基板) .... 4-11 (J)
  4-2-9. G/B/R周波数特性調整 (VA-99基板) .... 4-12 (J)
  4-2-10. OPT LEVEL ALARM G/B/R ランプ調整 (VA-99基板) .... 4-13 (J)
  4-2-11. +20 V/+5 V (A)/+5 V (D) 調整 (AU-135基板) .... 4-14 (J)
  4-2-12. PULSE WIDTH調整 (AU-135基板) .... 4-15 (J)
  4-2-13. AUDIO LEVEL調整 (AU-135基板) .... 4-16 (J)
  4-2-14. MSB調整 (AU-135基板) .... 4-17 (J)

4. ALIGNMENT

4-1. Preparation .... 4-1 (E)
  4-1-1. Equipment Required .... 4-1 (E)
  4-1-2. Connection .... 4-2 (E)
  4-1-3. Note on Adjustment .... 4-3 (E)
4-2. Adjustment Items .... 4-3 (E)
  4-2-1. Power Supply Adjustment (PS-228 Board) .... 4-4 (E)
  4-2-2. +9 V Adjustment (VA-99 Board) .... 4-5 (E)
  4-2-3. SYNC Clamp Level Adjustment (VA-99 Board) .... 4-6 (E)
  4-2-4. +9 V Adjustment (OTX-11 Board) .... 4-7 (E)
  4-2-5. +9 V Adjustment (ORX-11 Board) .... 4-8 (E)
  4-2-6. OPT G/B/R Frequency Response Adjustment(ORX-11 Board) .... 4-9 (E)
  4-2-7. Audio Frequency Response Adjustment (ORX-11 Board) .... 4-10 (E)
  4-2-8. G/B/R Signal Level Adjustment (VA-99 Board) .... 4-11 (E)
  4-2-9. G/B/R Freqency Response Adjustment (VA-99 Board) .... 4-12 (E)
  4-2-10. OPT Level Alarm G/B/R Lamp Adjustment (VA-99 Board) .... 4-13 (E)
  4-2-11. +20 V/+5 V (A)/+5 V (D) Adjustment (AU-135 Board) .... 4-14 (E)
  4-2-12. Pulse Width Adjustment (AU-135 Board) .... 4-15 (E)
  4-2-13. Audio Level Adjustment (AU-135 Board) .... 4-16 (E)
  4-2-14. MSB Adjustment (AU-135 Bosrd) .... 4-17 (E)

A. BLOCK DIAGRAMS

Overall Block Diagram A-1
ORX-11, VA-99 .... A-4
AU-135 .... A-7
OTX-11, CT-129, CT-130, LF-22, PS-227 .... A-10
PS-228 .... A-13

B. SEMICONDUCTOR

Semiconductor B-1

C. SCHEMATIC DIAGRAMS AND BOARD ILLUSTRATIONS

ORX-11 .... C-3
VA-99 .... C-8
AU-135 .... C-14
OTX-11 .... C-21
CT-129, CT-130, PS-227 .... C-28
PS-228 .... C-34
Frame
DP-118, DP-152, LF-22, MB-294 .... C-39

D. SPARE PARTS

Parts Information D-1
Exploded View D-2
Screws D-12
Electrical Parts D-13
Packing Materials & Supplied Accessories D-30

E. CHANGED PARTS

第1章　取り扱い操作

1-1. 概要

HDFR-300は、HDカラーカメラHDC-300を中心とするカメラシステム用の光受信機です。本機を光ファイバーケーブルFC6-PA250/500で光送信機HDFT-300と接続することにより、ビデオ、オーディオ信号をはじめとする各種信号を多重伝送するとともに、カメラヘッド用高圧電源を供給する光伝送システムを構成できます。
光送信機HDFT-300と光受信機HDFR-300による光伝送システムの主な特長は次の通りです。

光ファイバーケーブルによる多重伝送

光送受信機を光ファイバーケーブルFC6-PA250/500で接続し、ビデオ信号、オーディオ信号、リターンビデオ信号（ビューファインダー信号）、コマンド信号（ビデオ同期信号）、インターカム信号、コントロール信号などを多重伝送します。

最長接続距離1km

ケーブル延長コネクターFC6E-PA10を使用して、光送受信機の接続距離を1kmまで延長できます。

全帯域のGBRコンポーネントビデオ信号をアナログ送信

全帯域（30MHz）のGBRコンポーネントビデオ信号をアナログ送信し、高品質の画像伝送を可能にします。

合計6チャンネルのオーディオ入力をデジタル送信

光送信機は、AES/EBUフォーマットのデジタルオーディオ入力4チャンネルとマイクなどからのアナログオーディオ入力2チャンネルの計6チャンネルを、光信号に変換して光受信機にデジタル送信します。

デジタルオーディオ6チャンネルとアナログ変換オーディオ2チャンネルを出力

光受信機は、光送信機からのデジタルオーディオ6チャンネルの出力に加えて、そのうち2チャンネルをアナログ変換して出力することができます。
オーディオ入力信号にエンファシスがかかっているときは、出力時にディエンファシスをかけます。

光送信機およびカメラヘッドの電源を光受信機から供給

光送信機およびカメラヘッドHDC-300の電源（約190V）を、光ファイバーケーブルFC6-PA250/500に内蔵の電源線（2芯）によって光受信機から供給します。

光送信機によるオーディオ同期

光送信機へのビデオ入力、デジタルオーディオ入力、または光送信機の内蔵クロックを基準クロックとして使用し、他のデジタルオーディオ機器をワード同期でロックさせることができます。

HDFT-300とHDFR-300による光伝送システム構成例

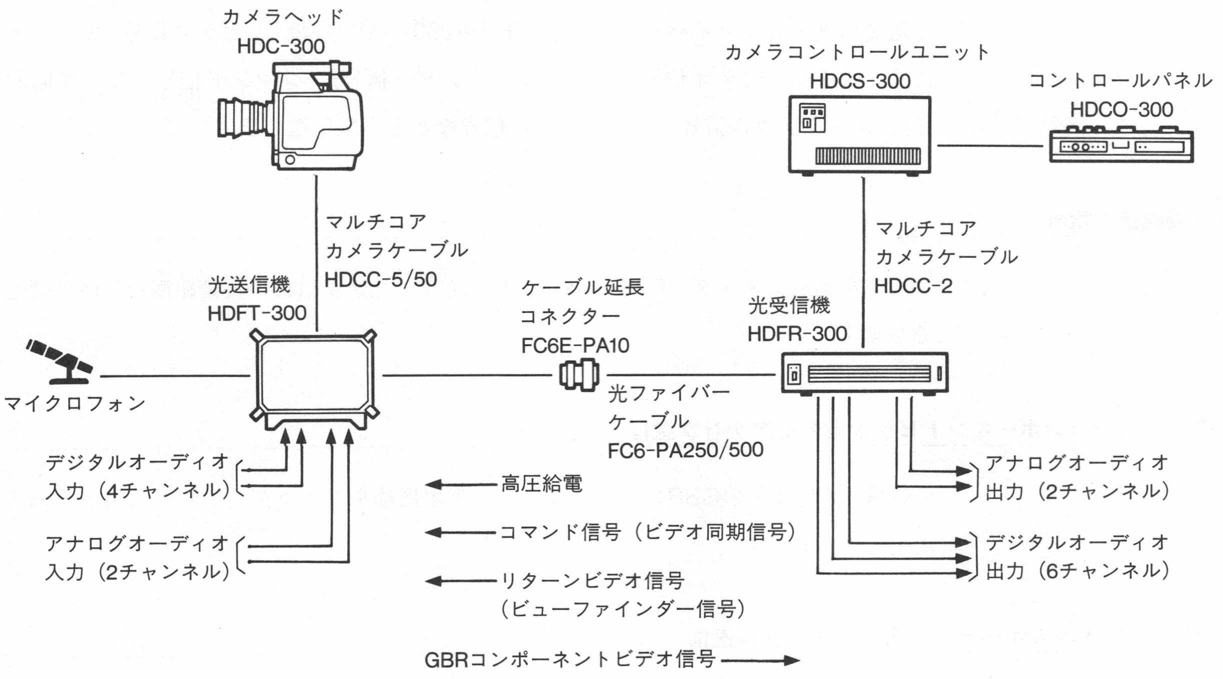

カメラヘッド
HDC-300
カメラコントロールユニット
HDCS-300
コントロールパネル
HDCO-300
マルチコア
カメラケーブル
HDCC-5/50
マルチコア
カメラケーブル
HDCC-2
光送信機
HDFT-300
ケーブル延長
コネクター
FC6E-PA10
光受信機
HDFR-300
マイクロフォン
光ファイバー
ケーブル
FC6-PA250/500
デジタルオーディオ
入力（4チャンネル）
アナログオーディオ
入力（2チャンネル）
高圧給電
コマンド信号（ビデオ同期信号）
リターンビデオ信号
（ビューファインダー信号）
GBRコンポーネントビデオ信号
アナログオーディオ
出力（2チャンネル）
デジタルオーディオ
出力（6チャンネル）

1-2．各部の名称と働き

前面

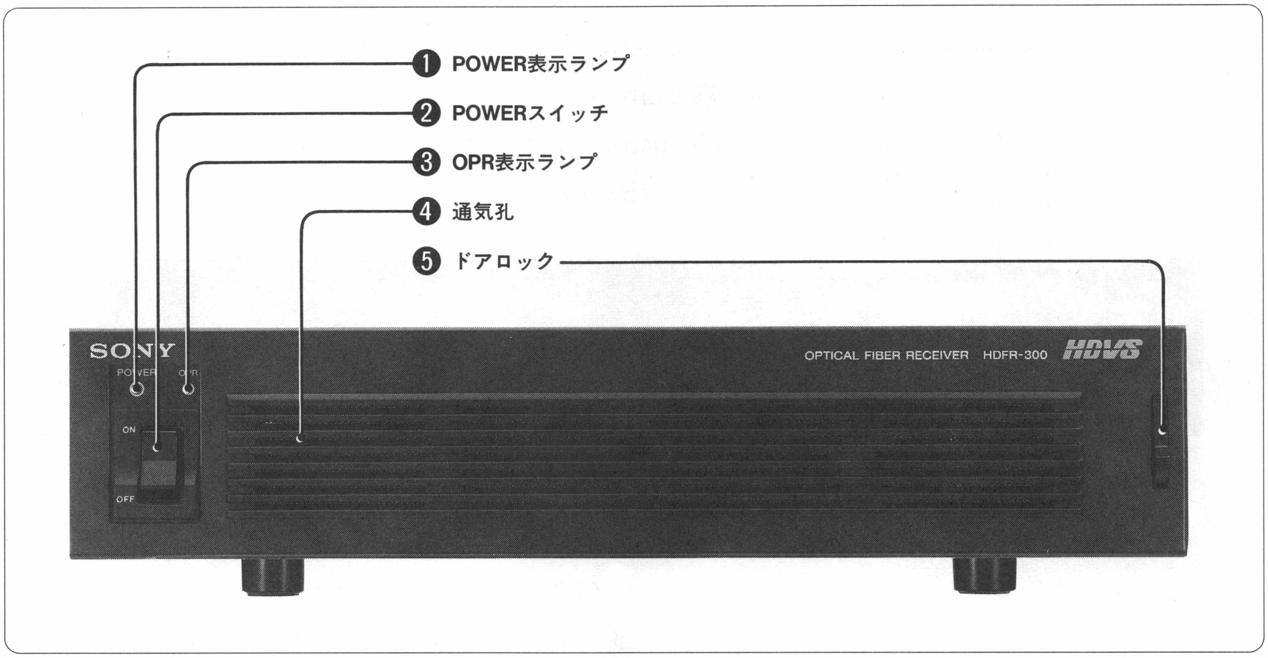
❶ POWER表示ランプ
❷ POWERスイッチ
❸ OPR表示ランプ
❹ 通気孔
❺ ドアロック
SONY
POWER
OPR
ON
OFF
OPTICAL FIBER RECEIVER HDFR-300
HDVS

❶ POWER（主電源）表示ランプ

POWERスイッチ❷をONにし、本機に給電が開始されると点灯します。

❷ POWER（主電源）スイッチ

ONにすると本機の主電源が入り、本機に給電が開始されます。(光送信機HDFT-300への給電の手順については、1-4「操作」をご覧ください。)

ご注意

本機は光送信機HDFT-300へ高圧電源（約190V）を供給します。POWERスイッチ❷をONにする前に、必ず所定の接続を行ってください（1-3「接続」参照)。特に、本機と光送信機HDFT-300の間の光ファイバーケーブルの接続を確認してください。

❸ OPR（高圧オペレーション）表示ランプ

本機から光送信機HDFT-300に対して高圧給電が行われている間、点灯し続けます。

❹ 通気孔

放熱用です。ふさがないようにしてください。

❺ ドアロック

下部を押し込んでアンロックし、そのまま手前に引くと前面パネルが開きます。

後面

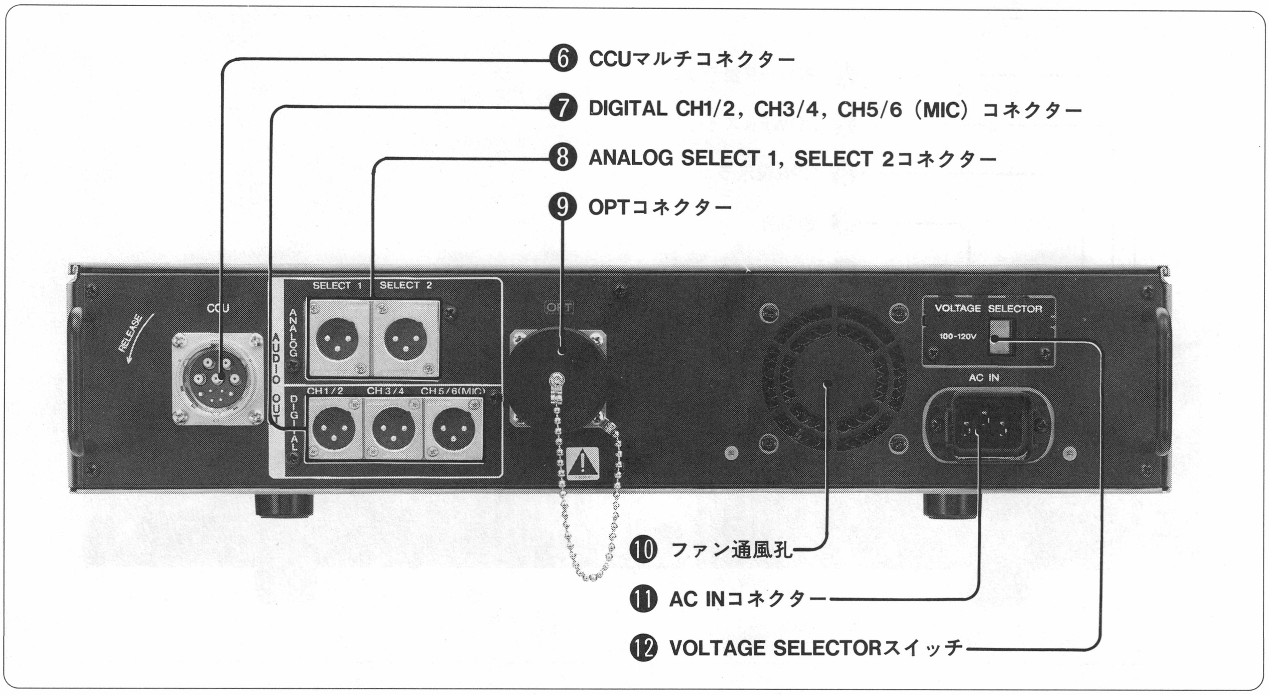
❻ CCUマルチコネクター
❼ DIGITAL CH1/2, CH3/4, CH5/6 (MIC) コネクター
❽ ANALOG SELECT 1, SELECT 2コネクター
❾ OPTコネクター
CCU
RELEASE
SELECT 1
SELECT 2
ANALOG
AUDIO OUT
DIGITAL
CH1/2
CH3/4
CH5/6(MIC)
OPT
VOLTAGE SELECTOR
100-120V
AC IN
❿ ファン通風孔
⓫ AC INコネクター
⓬ VOLTAGE SELECTORスイッチ

❻ CCU（カメラコントロールユニット）マルチコネクター

本機とカメラコントロールユニットHDCS-300を、付属のマルチコアカメラケーブルHDCC-2で接続するためのコネクターです。

このコネクターに接続されたマルチコアカメラケーブルを介して、インターカム信号やコントロール信号と多重化されたGBR信号が、本機からカメラコントロールユニットへ入力されます。また、カメラコントロールユニットから本機へは、リターンビデオ信号（ビューファインダー信号）と、インターカム信号やコントロール信号と多重化されたコマンド信号（ビデオ同期信号）が入力されます。

ご注意

マルチコアカメラケーブルは、所定の特性が得られるよう必ず指定の製品をご使用ください。

❼ DIGITAL CH1/2、CH3/4、CH5/6(MIC)（デジタル出力 チャンネル1/2、3/4、5/6(マイク)）コネクター（XLR3ピン）

それぞれ次のオーディオ信号をAES/EBUのデジタルフォーマットで出力します。

CH1/2：光送信機HDFT-300のAUDIO IN DIGITAL CH1/2（デジタルオーディオ入力チャンネル1/2）コネクターに入力されたデジタルオーディオ信号

CH3/4：光送信機のAUDIO IN DIGITAL CH3/4（デジタルオーディオ入力 チャンネル3/4）コネクターに入力されたデジタルオーディオ信号

CH5/6（MIC）：光送信機のAUDIO IN ANALOG CH5、CH6（アナログオーディオ入力 チャンネル5、6）コネクターに入力されたアナログオーディオ信号

❽ ANALOG SELECT 1、SELECT 2(アナログ出力 セレクト1、セレクト2)コネクター(XLR 3ピン)

光送信機HDFT-300から送信される最大6チャンネル(3ペア)のデジタルオーディオ信号のうち、本機のAU-135基板のANALOG AUDIO OUTチャンネル選択スイッチで選択した2チャンネル（1ペア）を、アナログ信号として出力するコネクターです。出力レベルは、AU-135基板の/ANALOG AUDIO OUTレベル設定スイッチで、＋4dBsまたは－20dBsを選択できます。(詳しくは、AU-135基板の説明(1-9（J）ページ)を参照してください。)

ご注意

本機出荷時、❽はオスのコネクターが実装されています。メスにしたい場合は、付属のメスのコネクター(ハーネス付き)と交換してください。交換方法については、第2章以降をご覧ください。

❾ OPT（オプチカル）コネクター

本機と光送信機HDFT-300を、光ファイバーケーブルFC6-PA250/500で接続するためのコネクターです。光ファイバーケーブルは、下記の用途に割り当てられた光ファイバー6芯および電源線2芯を内蔵しています。

芯　線		伝送する信号/電源	伝送方向
光ファイバー	2芯	リターンビデオ信号（ビューファインダー信号）とコマンド信号（ビデオ同期信号）	光送信機←光受信機
	3芯	GBRコンポーネントビデオ信号	光送信機→光受信機
	1芯	デジタルオーディオ信号	光送信機→光受信機
電源線	2芯	DC電源	光送信機←光受信機

ご注意

OPTコネクターや光ファイバーケーブル端のコネクターに何も接続していないときは、必ずコネクターキャップをかぶせておいてください。

コネクターキャップをかぶせるときは、キャップおよびコネクターにほこりやごみが付着していないことを確認してください。

（OPTコネクターおよび光ファイバーケーブル端のコネクターのクリーニング方法については、1-5「光コネクターのクリーニング」を参照してください。)

⑩ ファン通風孔

内部電源冷却用ファンのための通風孔です。通風を良くするため、壁面までの距離を25cm以上あけておいてください。

⑪ AC IN（AC電源入力）コネクター

付属のAC電源コードで電源コンセントに接続します。電源コードのプラグをこのコネクターに差し込んだ後、付属のプラグホルダーでプラグを固定してください。（詳しくは1-3「接続」参照）。

⑫ VOLTAGE SELECTOR（電源電圧選択）スイッチ

使用する電源電圧に応じて、100-120Vまたは220-240Vのどちらかに設定します（1-3「接続」参照）。

ご注意

工場出荷時の設定は100-120Vです。220-240Vでご使用の際は、必ず220-240Vに切り換えてください。

前面内部

前面パネルを開くと内部基板が現れます。

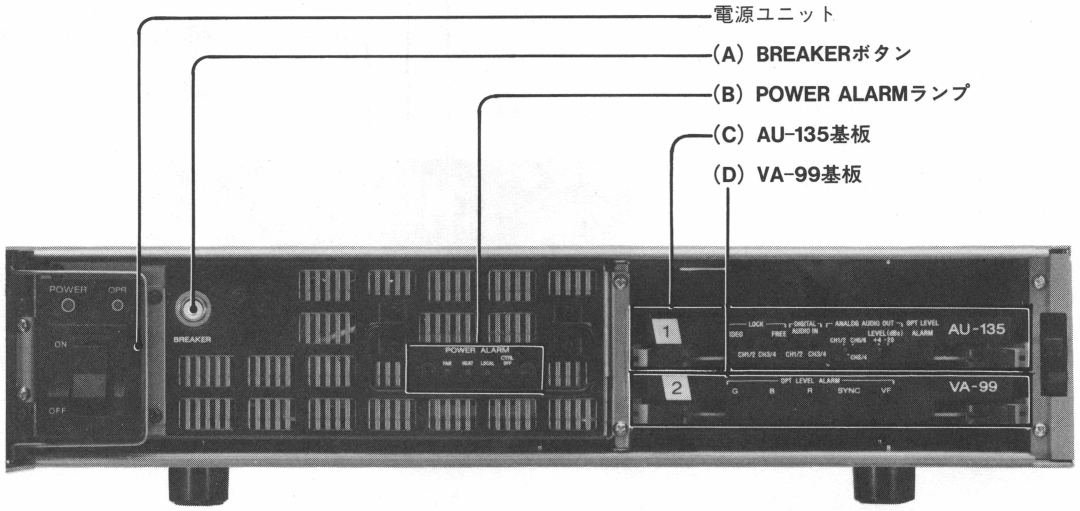
電源ユニット
(A) BREAKERボタン
(B) POWER ALARMランプ
(C) AU-135基板
(D) VA-99基板
POWER
OPR
ON
OFF
BREAKER
POWER ALARM
1
AU-135
2
VA-99
G
B
R
SYNC
VF

前面パネルの開けかた

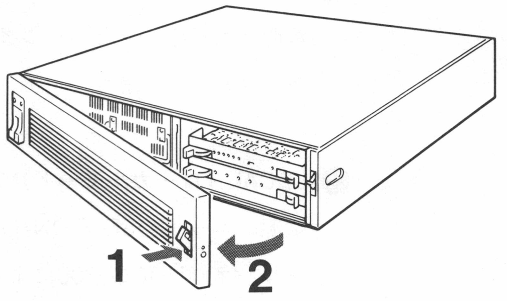

ドアロックの下部を押し込み、手前に引く。

ご注意

電源ユニットは高電圧を発生しています。危険ですので、ユニットを外に引き出したり、ユニット内部に触れたりしないでください。
（メンテナンスについては、第2章以降をご覧ください。）

(A) BREAKER（ブレーカー）ボタン

電源ユニットに異常電流が流れると、このボタンが突出して本機への入力電流を遮断します。操作を再開する前に、前面のPOWERスイッチをOFFにして原因を取り除き、このボタンを押し込んでください。

（B）POWER ALARM（電源アラーム）ランプ

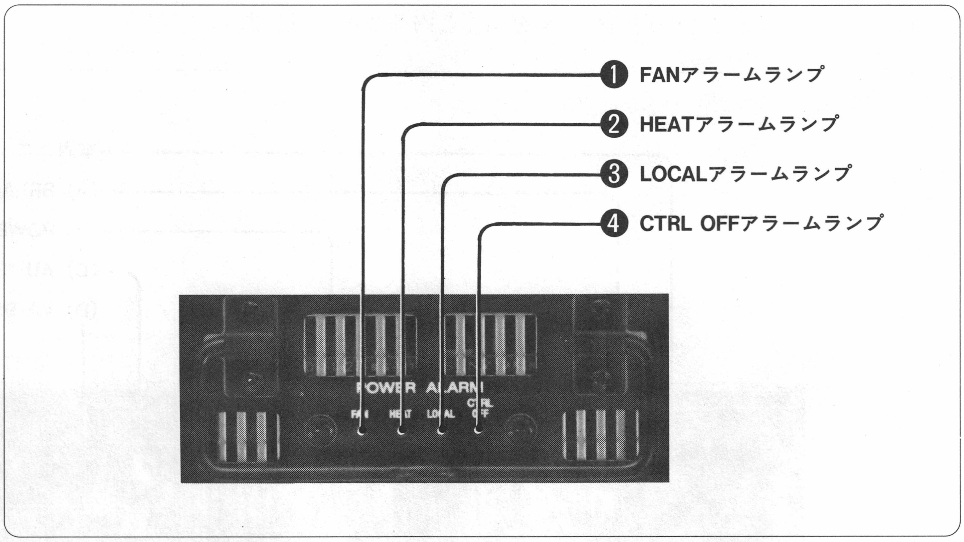
❶ FANアラームランプ
❷ HEATアラームランプ
❸ LOCALアラームランプ
❹ CTRL OFFアラームランプ
POWER ALARM
FAN
HEAT
LOCAL
CTRL OFF

❶ FAN（ファン）アラームランプ

電源ユニット内部の空冷ファンが停止すると点灯します。

❷ HEAT（オーバーヒート）アラームランプ

電源ユニットのスイッチング素子が過熱すると、回路が機能を停止して、このアラームランプが点灯します。

❸ LOCAL（ローカルモード）アラームランプ

電源ユニットのSELF ON/OFFスイッチS201（メンテナンス用）をONにする（コントロールパネルHDCO-300による本機のリモートコントロールが行えない状態にする）と点灯します。（詳しくは第2章以降をご覧ください。）

❹ CTRL OFF（コントロールオフ）アラームランプ

電源ユニットのON/NOR/OFFスイッチS202（メンテナンス用）を、NOR（出荷時の設定）以外に設定すると点灯します。

ご注意

通常は、ON/NOR/OFFスイッチS202をNORに設定した状態でお使いください。NOR以外の設定で使用すると危険な場合があります。

（C）AU-135基板

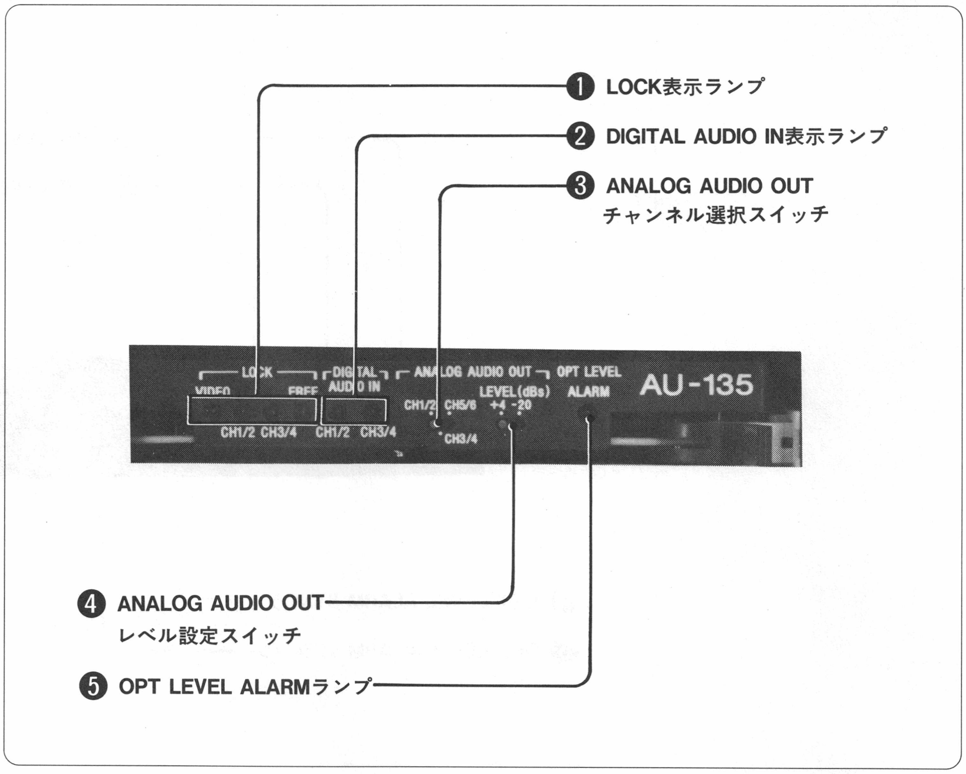
❶ LOCK表示ランプ
❷ DIGITAL AUDIO IN表示ランプ
❸ ANALOG AUDIO OUT チャンネル選択スイッチ
LOCK
VIDEO
FREE
DIGITAL AUDIO IN
CH1/2 CH3/4
CH1/2 CH3/4
ANALOG AUDIO OUT
CH1/2 CH5/6
CH3/4
LEVEL(dBs)
+4 -20
OPT LEVEL ALARM
AU-135
❹ ANALOG AUDIO OUT レベル設定スイッチ
❺ OPT LEVEL ALARMランプ

❶ LOCK（ロック）表示ランプ

デジタルオーディオ出力のマスタークロックとなっている信号（チャンネル）を表示します。FREEが点灯しているときは、光送信機HDFT-300の内蔵クロックがマスタークロックとなっています。

❷ DIGITAL AUDIO IN（デジタルオーディオ入力）表示ランプ

外部デジタルオーディオ信号が入力されているチャンネルを表示します。

❸ ANALOG AUDIO OUT（アナログオーディオ出力）チャンネル選択スイッチ

最大6チャンネル（CH1/2、CH3/4およびCH5/6）のデジタルオーディオ入力信号のうち、アナログ変換してANALOG SELECT 1、SELECT 2コネクターから出力させる信号（チャンネル）を選択します。

❹ ANALOG AUDIO OUT（アナログオーディオ出力）レベル設定スイッチ

ANALOG AUDIO OUTチャンネル選択スイッチ❸で選択したオーディオ信号の標準出力レベル（＋4dBsまたは−20dBs）を設定します。

❺ OPT LEVEL ALARM（受光レベルアラーム）ランプ

本基板に入力される信号の受光レベルが低下すると点灯します。

（D）VA-99基板

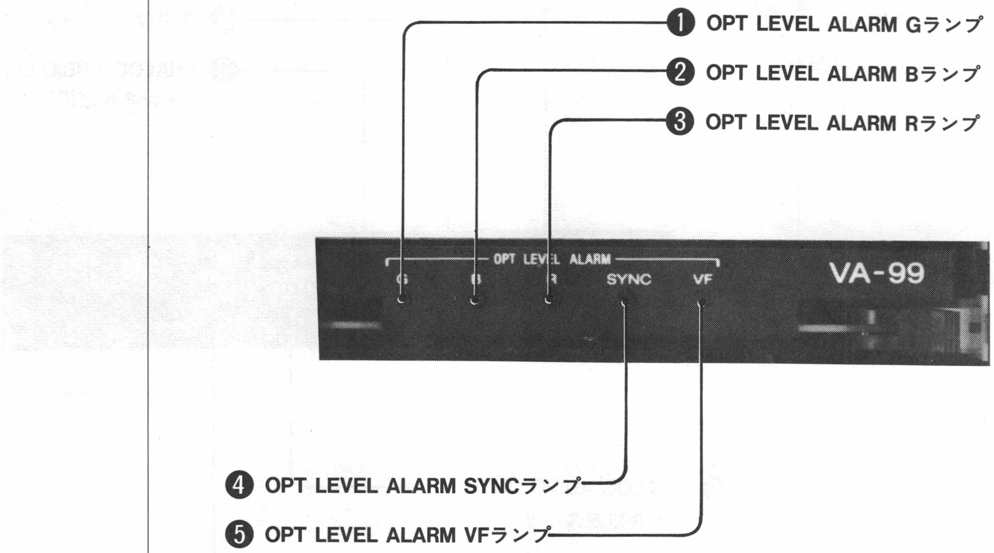
❶ OPT LEVEL ALARM Gランプ
❷ OPT LEVEL ALARM Bランプ
❸ OPT LEVEL ALARM Rランプ
OPT LEVEL ALARM
G
B
R
SYNC
VF
VA-99
❹ OPT LEVEL ALARM SYNCランプ
❺ OPT LEVEL ALARM VFランプ

❶ OPT LEVEL ALARM G（G信号受光レベルアラーム）ランプ

光送信機HDFT-300から受信するコンポーネントビデオ信号のうち、G信号の受光レベルが低下すると点灯します。

❷ OPT LEVEL ALARM B（B信号受光レベルアラーム）ランプ

光送信機から受信するコンポーネントビデオ信号のうち、B信号の受光レベルが低下すると点灯します。

❸ OPT LEVEL ALARM R（R信号受光レベルアラーム）ランプ

光送信機から受信するコンポーネントビデオ信号のうち、R信号の受光レベルが低下すると点灯します。

❹ OPT LEVEL ALARM SYNC（光同期信号レベルアラーム）ランプ

光送信機に送出したコマンド信号（ビデオ同期信号）の、光送信機側での受光レベルが低下すると点灯します。

❺ OPT LEVEL ALARM VF（光ビューファインダー信号レベルアラーム）ランプ

光送信機HDFT-300に送出したリターンビデオ信号（ビューファインダー信号）の、光送信機側での受光レベルが低下すると点灯します。

ご注意

上記アラームランプが1つでも点灯した場合は、操作を一時停止して原因を取り除いてください。アラーム状態では、本機の性能は保証されません。（メンテナンスについては、第2章以降をご覧ください。）

1-3. 接続

接続および設置に関する注意事項

●接続を行う前に、本機および光送信機HDFT-300のPOWERスイッチが両方ともOFFになっていることを必ず確認してください。

●本機または光送信機HDFR-300に接続したケーブルを外すときも、必ず両機のPOWERスイッチをOFFにしてから外してください。

●光送信機HDFT-300とカメラヘッドHDC-300その他の機器との接続については、HDFT-300のオペレーション アンド メンテナンスマニュアルをご覧ください。

●光ファイバーケーブルは、コネクターブーツの色が、本機のOPTコネクターの表示（OPT）と同じ色のものをお使いください。それ以外のケーブルを接続すると、所定の機器特性を得ることができない場合があります。

●光ファイバーケーブルを接続するときは、ケーブル端のコネクターを本機のOPTコネクターにしっかり差し込んでから、ケーブル端コネクターの締め付けリングを回して固定してください。締め付けリングは、コネクターの抜け落ちを防止するためのものです。必要以上に強く締め付けないようにしてください。

●光ファイバー接続部にちりやごみなどの異物が入り込まないように注意してください。コネクターの端面が汚れたり傷ついたりすると、接続損失が増加して信号が劣化します。

コネクターのクリーニング方法については、1-5「光コネクターのクリーニング」をご覧ください。

●本機の前後面は壁などから25cm以上離してください。

●次のような場所での設置、保管、操作は避けてください。

・高温または多湿の場所
・ほこりの多い場所
・振動の激しい場所
・直射日光や強力なライトの直射を受ける場所
・強電界、強磁場のある場所

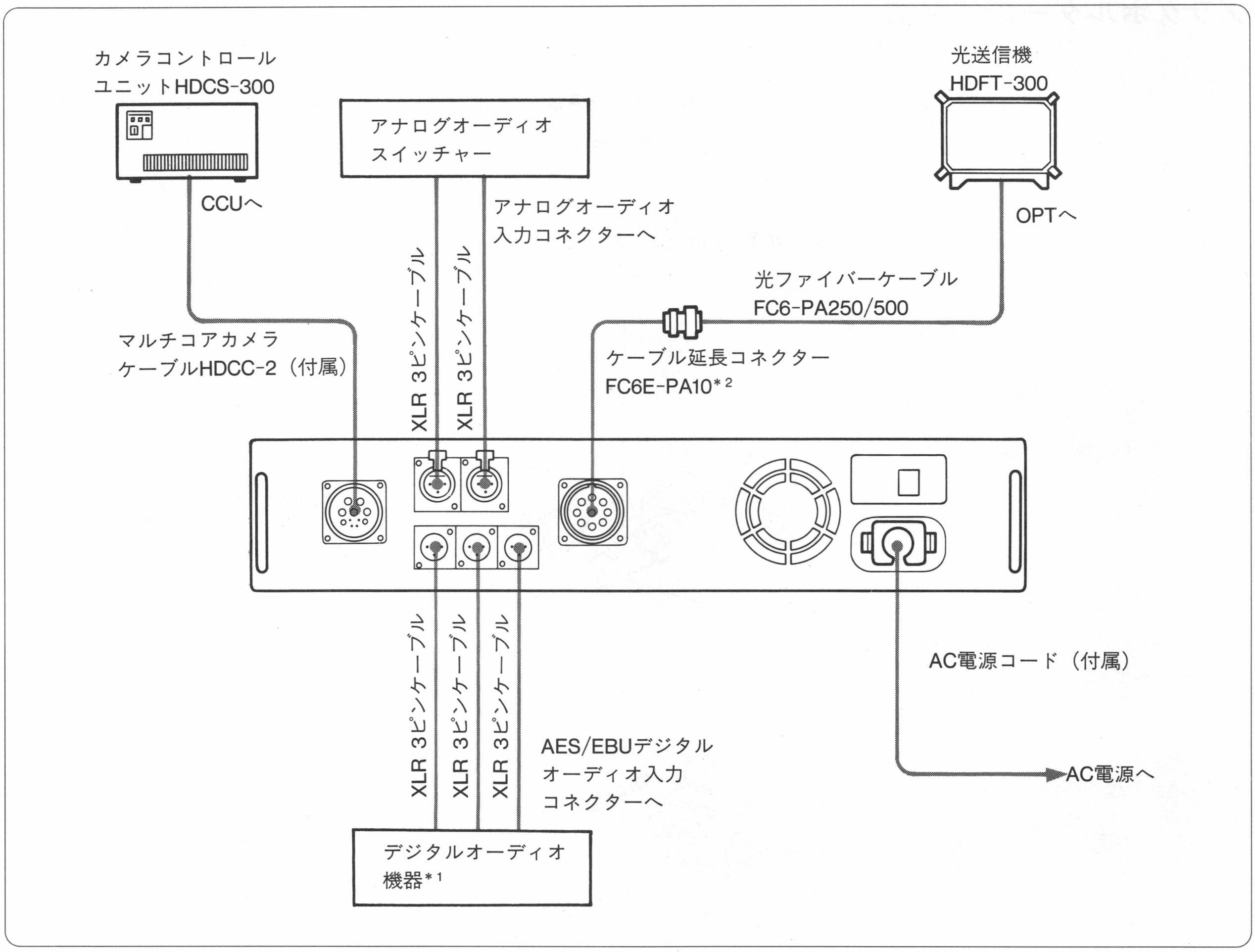
カメラコントロール
ユニットHDCS-300
アナログオーディオ
スイッチャー
光送信機
HDFT-300
CCUへ
アナログオーディオ
入力コネクターへ
OPTへ
光ファイバーケーブル
FC6-PA250/500
XLR 3ピンケーブル
XLR 3ピンケーブル
マルチコアカメラ
ケーブルHDCC-2（付属）
ケーブル延長コネクター
FC6E-PA10*2
AC電源コード（付属）
XLR 3ピンケーブル
XLR 3ピンケーブル
XLR 3ピンケーブル
AES/EBUデジタル
オーディオ入力
コネクターへ
AC電源へ
デジタルオーディオ
機器*1

*1 AES/EBU規格のデジタルオーディオ入力のある機器。

*2 FC6E-PA10で光ファイバーケーブルを2本以上つなぐことにより、接続距離を1kmまで延長できます。

プラグホルダーの使用法

AC電源コード（付属）のプラグをAC INコネクターに接続した後、プラグが抜け落ちないように付属のプラグホルダーで固定してください。

プラグホルダーの取り付け

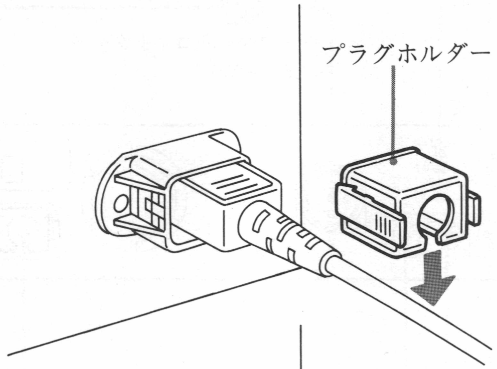

1 付属のプラグホルダーをAC電源コードにはめる。

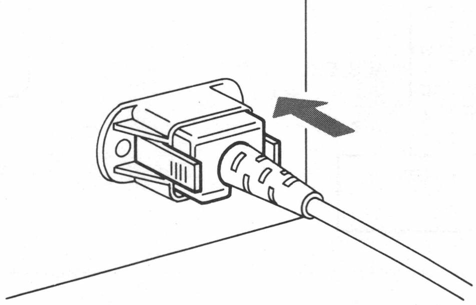

2 AC電源コードのプラグの上からAC INコネクターにはめ込む。

プラグホルダーの取り外し

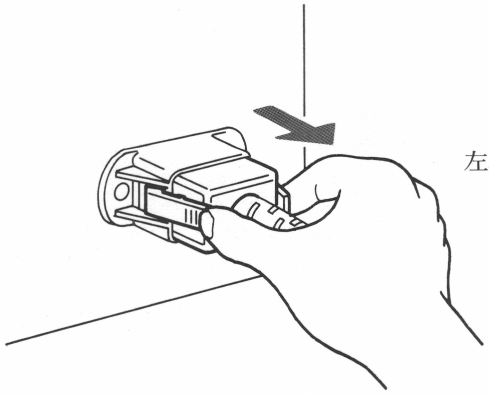

左右のレバーを押えながら引き離す。

VOLTAGE SELECTORスイッチの切り換え

本機は出荷時100-120Vに設定されています。220-240Vで使用する場合はVOLTAGE SELECTORスイッチの設定を切り換えてください。

設定の切り換えかた

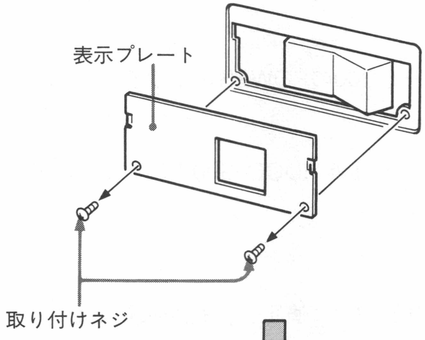
表示プレート
取り付けネジ

1 取り付けネジと表示プレートを外す。

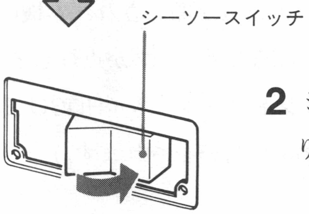

2 シーソースイッチの設定を切り換える。

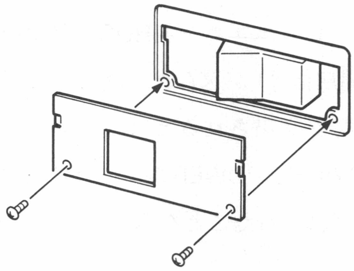

3 表示プレートを裏返して取り付ける。

1-4．操作

1 本機および光送信機HDFT-300側で、所定の接続と設定が正しく行われていることを確認します。

2 カメラコントロールユニットHDCS-300のMAIN POWERスイッチをONにします。

3 コントロールパネルHDCO-300のPOWERスイッチをONにします。

4 本機のPOWERスイッチをONにします。POWER表示ランプが点灯します。

5 光送信機HDFT-300のPOWERスイッチをONにします。

6 コントロールパネルHDCO-300のCHU POWERスイッチをONにします。スイッチが点滅を始めます。

光送信機HDFT-300に適正な負荷が接続されていると判定されると、本機から光送信機への給電が開始され、本機のOPR表示ランプが点灯します。（光送信機側では、POWER表示ランプが点灯します。）
（コントロールパネルHDCO-300のCHU POWERスイッチを再度押すと、光送信機への給電は停止されます。）

7 カメラヘッドHDC-300のPOWERスイッチをONにすると、カメラシステムは動作状態になります。

カメラコントロールユニットHDCS-300からカメラヘッドHDC-300へコマンド信号（ビデオ同期信号）が送られ、カメラヘッドからそれに同期したGBRコンポーネントビデオ信号が送出されると（システムの同期が取れると）、コントロールパネルHDCO-300のCHU POWERスイッチの状態が点滅から点灯に変わり、システムが正常な動作状態に入ったことを示します。

電源を切る場合は、上記の手順を逆に実行してください。

1-5．光コネクターのクリーニング

本機や光送信機HDFT-300のOPTコネクター、光ファイバーケーブルFC6-PA250/500端部のコネクター、ケーブル延長コネクターFC6E-PA10などが汚れると、接続損失が増加して信号が劣化します。劣化が認められた場合は、これらコネクター類を次のようにしてクリーニングしてください。

1 適当な洗浄用高圧乾燥ガス（浄化された窒素ガスなど）を用意します。

2 噴射孔を少し上に向けて軽く噴射し、液体やごみなどが噴出しないことを確認します。

3 コネクターに高圧ガスを噴射して、ごみなどを吹き飛ばします。

ご注意

噴射孔の端部がコネクターに直接触れないようにしてください。

上記の方法で汚れが落ちない場合は、第2章以降を参照してクリーニングしてください。

1-6．主な仕様

システム

発光素子	AlGaAs LED （λ＝0.85μm）	
受光素子	Si PIN-PD	
変調方式	ベースバンド	直接輝度変調
映像信号	周波数帯域	60Hz～30MHz
	S/N	47dB以上
	直線性	2%以下（100%レベルまで）
オーディオ信号	周波数帯域	20Hz～20kHz
	S/N	55dB以上（1kHz基準レベル）（MIC入力）
		65dB以上（1kHz基準レベル）（LINE入力）
	歪率	0.05%以下（1kHz基準レベル）
	ヘッドルーム	20dB以上

HDFR-300

電源	AC 90～130V/180～260V 切り換え式（50/60Hz）
消費電力	400W（max.）
入力信号	
コマンド信号（ビデオ同期信号）（11ピン マルチコネクター）	
	0.3Vp-p、75Ω不平衡、正極性
リターンビデオ信号（ビューファインダー信号）（11ピン マルチコネクター）	
	1Vp-p、75Ω不平衡、正極性
出力信号	
GBR信号（11ピン マルチコネクター）	
	1Vp-p、75Ω不平衡、正極性
オーディオ信号	アナログ（XLR 3ピン コネクター 2個、2チャンネル）
	平衡 ＋4dBs/－20dBs出力レベル切り換え式
	(6チャンネルから2チャンネルをペアで選択)
	デジタル（XLR 3ピン コネクター 3個、6チャンネル）
	AES/EBUフォーマット
動作温度	0°C～40°C
外形寸法	424×88×450mm（幅/高さ/奥行き）
重量	14kg

付属品

延長基板（1）

AC電源コード（3芯プラグ付きと、先ばらコード）（各1）

プラグホルダー（1）

2p-3p変換プラグ（1）

ラックマウント金具（1式）

マルチコアカメラケーブルHDCC-2（1）

交換用オーディオ出力コネクター（メス、ハーネス付き）（1）

オペレーション アンド メンテナンス マニュアル（1）

仕様および外観は、改良のため予告なく変更することがありますが、ご了承ください。

別売りアクセサリー

マルチコアカメラケーブル　HDCC-5（5m）

ケーブル延長コネクター　FC6E-PA10

Section 1. OPERATION

1-1. Overview

The HDFR-300 optical fiber receiver is designed for use with camera systems incorporating the HDC-300 HD color camera (camera head). A single FC6-PA250/500 optical fiber cable, connecting this unit to an HDFT-300 optical fiber transmitter carries the multiplexed audio and video signals along with the high voltage power for the camera head.

The following are some of the principal features of an optical transmission system using the HDFT-300 and HDFR-300 optical fiber transmitter and receiver.

Multiplexed transmission by optical fiber cable

The FC6-PA250/500 optical fiber cable connecting the optical fiber transmitter and receiver achieves multiplexed transmission of the video signals, audio signals, return video signal (viewfinder signal), command signals (video sync signal), intercom signals and control signals.

Maximum transmission distance 1 km

Using one or more FC6E-PA10 extension connectors, the distance between the optical fiber transmitter and receiver can be a maximum of 1 km (3280 ft.).

Analog transmission of full-bandwidth GBR component video signals

Analog transmission of the full-bandwidth (30 MHz) GBR component video signals enables high quality image transmission.

Digital transmission of six audio input channels

The optical fiber transmitter has a total of six (three pairs of) audio input channels: four (two pairs of) digital audio channels in AES/EBU format, and two (a pair of) analog audio input channels for connecting microphones or other analog audio equipment. These are converted to digital optical signals for transmission to the optical fiber receiver.

Receiver audio outputs

The optical fiber receiver has six (three pairs of) digital audio output channels. Additionally, it has two analog audio output channels, through which one of the three pairs of input digital audio signals can be output after conversion to analog signals.

If the input signals have emphasis applied, then de-emphasis is applied on output.

Transmitter and camera head power supply from the receiver

The optical fiber receiver can supply the power (about 190 V) for the transmitter and the camera head through the pair of power lines incorporated into the FC6-PA250/500 optical fiber cable.

Audio synchronization by the transmitter

The optical fiber transmitter can use the selected video input signal, digital audio input signal or its own internal clock for word synchronization of other digital audio equipment.

Configuration example of optical fiber transmission system using HDFT-300 and HDFR-300

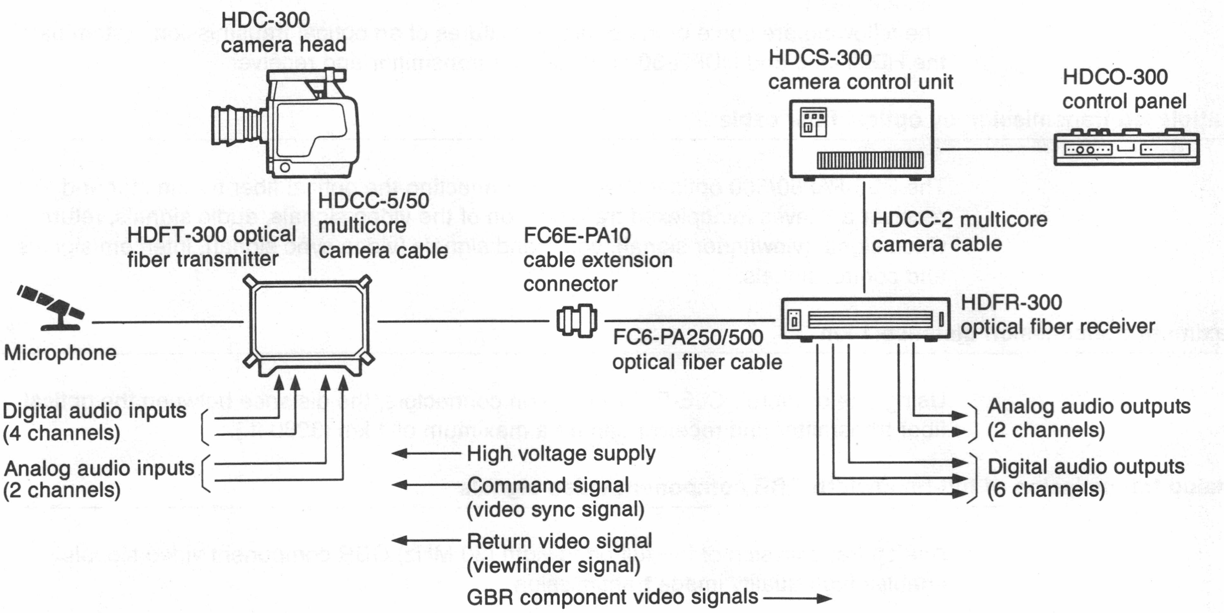
HDC-300
camera head
HDCS-300
camera control unit
HDCO-300
control panel
HDCC-5/50
multicore
camera cable
HDFT-300 optical
fiber transmitter
FC6E-PA10
cable extension
connector
HDCC-2 multicore
camera cable
HDFR-300
optical fiber receiver
Microphone
FC6-PA250/500
optical fiber cable
Digital audio inputs
(4 channels)
Analog audio inputs
(2 channels)
High voltage supply
Command signal
(video sync signal)
Return video signal
(viewfinder signal)
GBR component video signals
Analog audio outputs
(2 channels)
Digital audio outputs
(6 channels)

Principal components of the camera system	Term used in this manual
HDC-300 HD color camera	Camera head
HDCS-300 HD camera signal processor	Camera control unit
HDCO-300 HD camera operational control unit	Control panel

1-2. Location and Function of Parts

Front panel

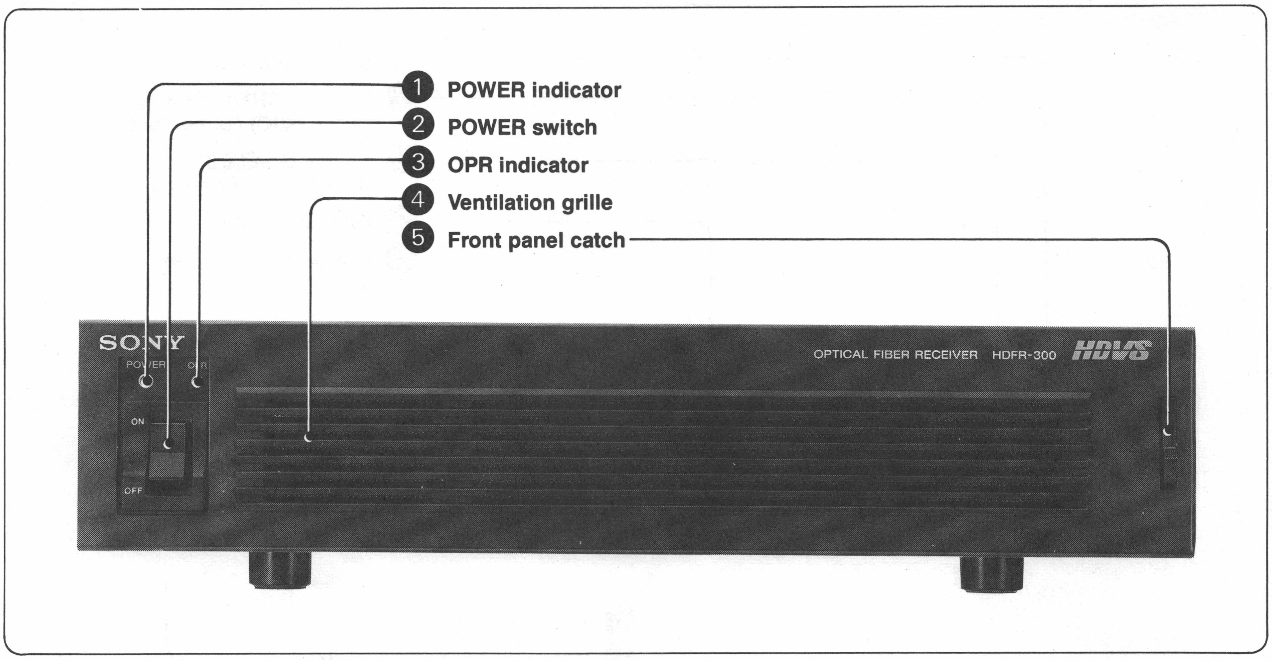
① POWER indicator
② POWER switch
③ OPR indicator
④ Ventilation grille
⑤ Front panel catch
SONY
POWER
OPR
ON
OFF
OPTICAL FIBER RECEIVER HDFR-300
HDVS

① **POWER indicator**
This indicator lights when the POWER switch ② is turned on and power is supplied to this unit.

② **POWER switch**
This controls the main power supply to this unit. (See 1-4 ''Operation'' for the procedure for switching on the power supply to the HDFT-300 optical fiber transmitter.)

Note

This unit provides the high voltage supply (about 190 V) to the HDFT-300 optical fiber transmitter. For safety, be sure to make the necessary connections (see 1-3 ''Connections'') before switching on the power. In particular, check the connections of the optical fiber cable between this unit and the HDFT-300 optical fiber transmitter.

③ **OPR (high voltage operation) indicator**
This indicator lights continuously when the high voltage supply is being sent to the HDFT-300 optical fiber transmitter.

④ **Ventilation grille**
This is for cooling purposes; do not obstruct in any way.

⑤ **Front panel catch**
Press the bottom end to unlock, then pull the top end to open the front panel.

Rear panel

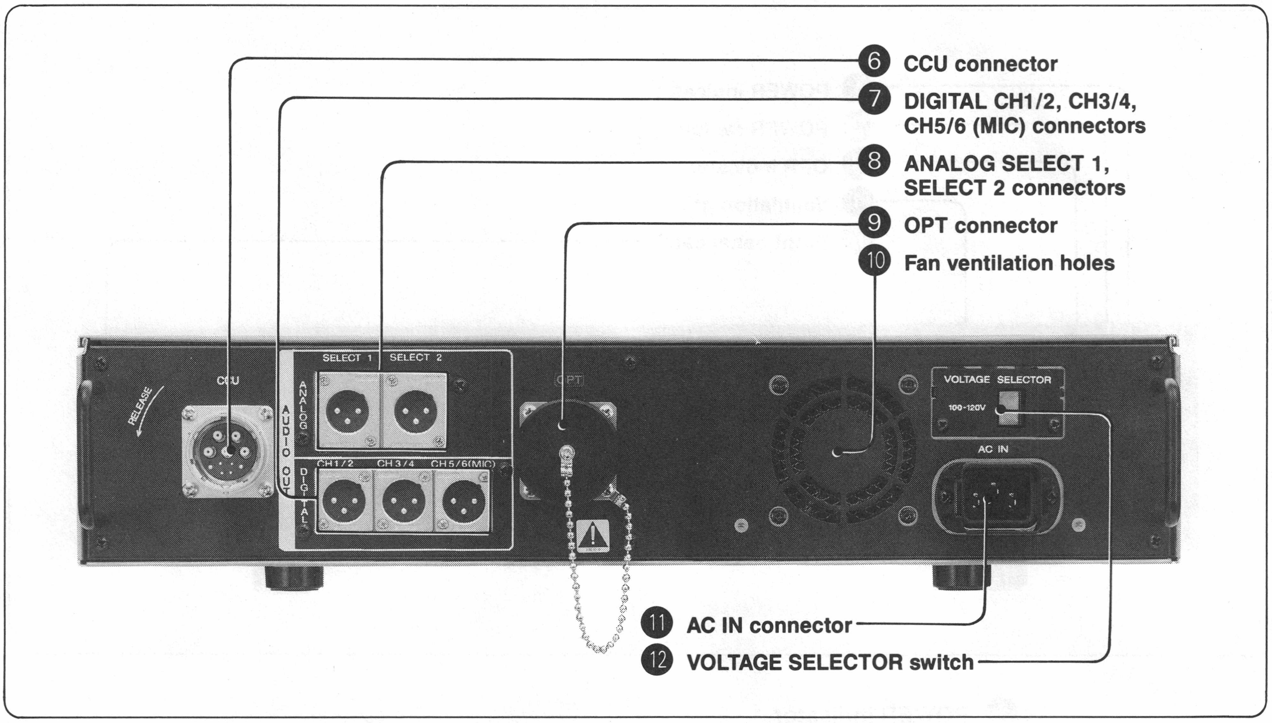
❻ CCU connector
❼ DIGITAL CH1/2, CH3/4, CH5/6 (MIC) connectors
❽ ANALOG SELECT 1, SELECT 2 connectors
❾ OPT connector
❿ Fan ventilation holes
⓫ AC IN connector
⓬ VOLTAGE SELECTOR switch
CCU
RELEASE
SELECT 1
SELECT 2
ANALOG
AUDIO OUT
DIGITAL
CH1/2
CH3/4
CH5/6(MIC)
OPT
VOLTAGE SELECTOR
100-120V
AC IN

❻ **CCU (camera control unit) connector (11-pin)**
Use the HDCC-2 multicore camera cable (supplied) to connect the HDCS-300 camera control unit to this connector.
This cable inputs the GBR component video signals multiplexed with the intercom and control signals to the camera control unit from this unit, and also carries the return video signal (viewfinder signal) and the command signal (video sync signal) multiplexed with the intercom and control signals from the camera control unit to this unit.

Note

To obtain the required characteristics, always use the specified product for the multicore camera cable.

❼ **DIGITAL CH1/2, CH3/4, CH5/6 (MIC) connectors (XLR 3-pin)**
These output the following audio signals in AES/EBU digital format.

CH1/2: The digital audio signals input to the AUDIO IN DIGITAL CH1/2 connector on the HDFT-300 optical fiber transmitter.

CH3/4: The digital audio signals input to the AUDIO IN DIGITAL CH3/4 connector on the HDFT-300 optical fiber transmitter.

CH5/6 (MIC): The analog audio signals input to the AUDIO IN ANALOG CH5 and CH6 connectors on the HDFT-300 optical fiber transmitter.

⑧ **ANALOG SELECT 1, SELECT 2 connectors (XLR 3-pin)**
These connectors provide analog audio outputs for one of the three audio input channel pairs sent from the HDFT-300 optical fiber transmitter. The ANALOG AUDIO OUT channel switch on the AU-135 board of this unit determines which pair of channels is converted from digital format. The output level is selectable with the ANALOG AUDIO OUT level switch on the AU-135 board to +4 dBs or −20 dBs. (For more details, see page 1-8(E).)

Note

When this unit is shipped, the connectors ⑧ are male. If you want to use female connectors, replace the male connectors with the female connectors (complete with harness) supplied with the unit. See the subsequent sections of this manual for the method of replacement.

⑨ **OPT connector**
This is the optical connector for the FC6-PA250/500 optical fiber cable connecting this unit to the HDFT-300 optical fiber transmitter. This cable includes six optical fiber cores and two electrical lines allocated as in the following table.

Line		Signal carried	Transmission direction
Optical fibers	2 cores	Return video signal (viewfinder signal) and command signal (video sync signal)	Transmitter ← Receiver
	3 cores	GBR component video signals	Transmitter → Receiver
	1 core	Digital audio signals	Transmitter → Receiver
Electrical lines	2 lines	DC power supply	Transmitter ← Receiver

Notes

- Always fit the connector caps on the OPT connector and the end connector of the optical fiber cable when they are not connected.
- When fitting the connector caps, ensure that there is no dirt or dust in contact with the cap or connector. (See 1-5 ''Optical Connector Cleaning'' for details on how to clean the OPT connector and optical fiber cable connectors.)

⑩ **Fan ventilation holes**
The fan cools the internal power supply unit. To ensure a sufficient flow of air through the fan, ensure that there is a gap of at least 25 cm (about 10 inches) between this rear panel and any surrounding walls.

⑪ **AC IN connector**
Use the power cord supplied to connect this to a power outlet. After inserting the plug in this connector, fix it with the plug holder supplied. (For details, see 1-3 ''Connections'')

⑫ **VOLTAGE SELECTOR switch**
Use this to select the AC power supply voltage (100-120 V or 220-240 V). See 1-3 ''Connections''.

Note

The unit is shipped with the power supply setting at 100-120 V. If using 220-240 V, be sure to change the setting first.

Internal circuit boards

To access the internal circuit boards, release the front panel catch, and open the front panel.

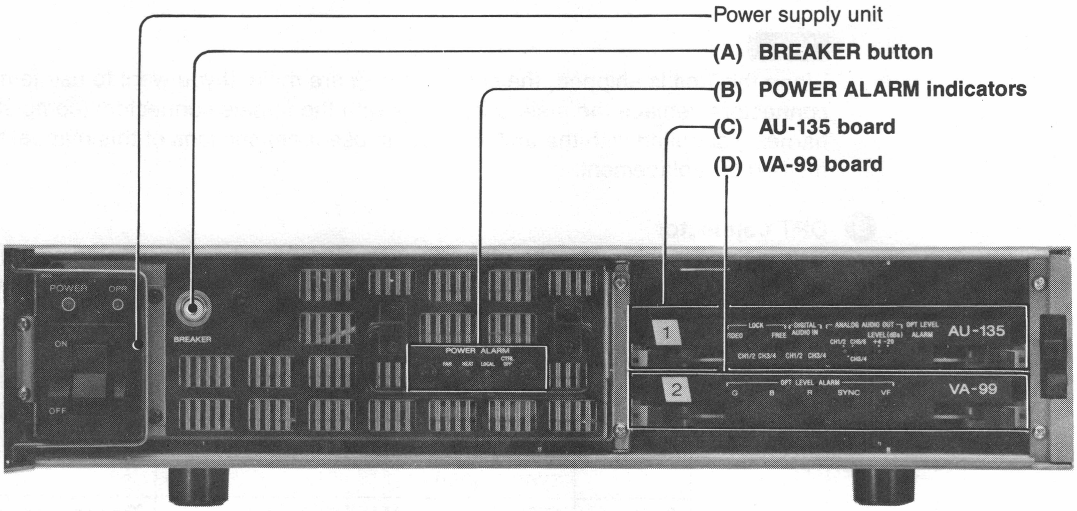
Power supply unit
(A) BREAKER button
(B) POWER ALARM indicators
(C) AU-135 board
(D) VA-99 board
POWER
OPR
ON
OFF
BREAKER
POWER ALARM
FAN
HEAT
LOCAL
CTRL OFF
1
LOCK
VIDEO
FREE
DIGITAL AUDIO IN
ANALOG AUDIO OUT
LEVEL (dBs)
OPT LEVEL ALARM
CH1/2
CH3/4
AU-135
2
OPT LEVEL ALARM
G
B
R
SYNC
VF
VA-99

Opening the front panel

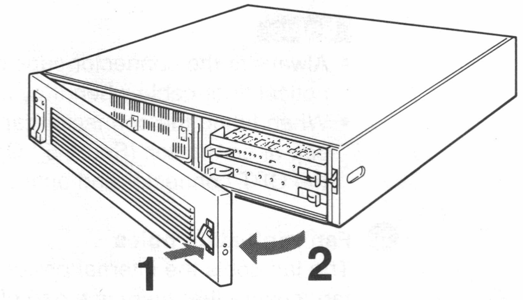

Press the bottom end of the front panel catch, and pull forward.

Note

The power supply unit produces a high voltage. It is dangerous, so do not remove the power supply unit or touch the interior.
(For maintenance information, see the subsequent sections of this manual.)

(A) BREAKER button

If there is a current surge in the power supply unit, the circuit breaker will operate, and this button will jump out, cutting off the power. To restart operation, first turn off the POWER switch on the front panel, and remove the cause of the fault, then push this button back in.

(B) POWER ALARM indicators

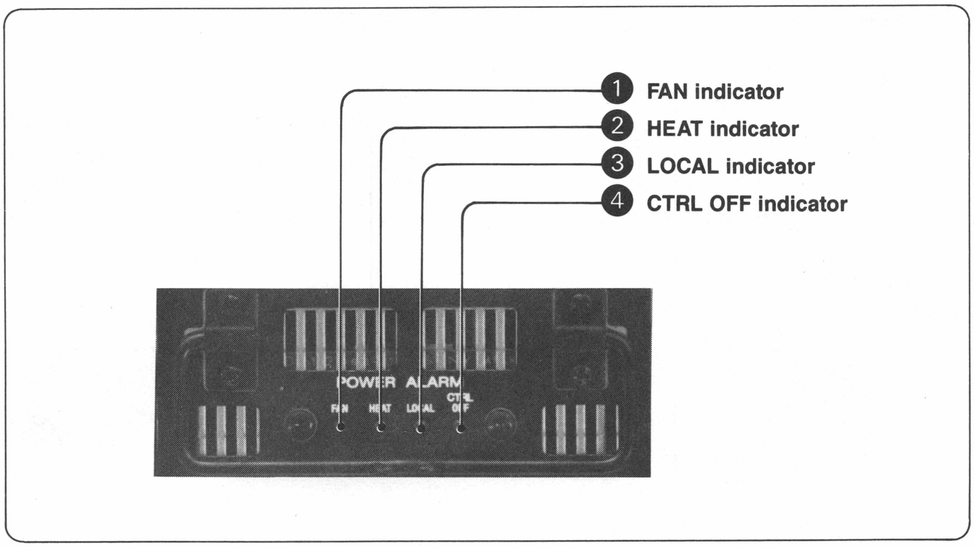
❶ FAN indicator
❷ HEAT indicator
❸ LOCAL indicator
❹ CTRL OFF indicator
POWER ALARM
FAN
HEAT
LOCAL
CTRL OFF

❶ **FAN indicator**
If the cooling fan stops, this indicator will light.

❷ **HEAT indicator**
If the switching elements in the power supply unit overheat, and the circuit can no longer function, this indicator will light.

❸ **LOCAL indicator**
If the SELF ON/OFF switch S201 (for maintenance purposes) in the power supply unit is set to ON, this indicator will light. In this state, remote control of this unit by the HDCO-300 control panel is not possible. (For details, see the subsequent sections of this manual.)

❹ **CTRL OFF indicator**
This indicator lights whenever the power supply unit ON/NOR/OFF switch S202 (for maintenance purposes) is set other than to NOR. The unit is shipped with S202 set to NOR.

Note

Switch S202 should normally be in the NOR position. It may be dangerous to operate the unit with this switch set otherwise.

(C) AU-135 board

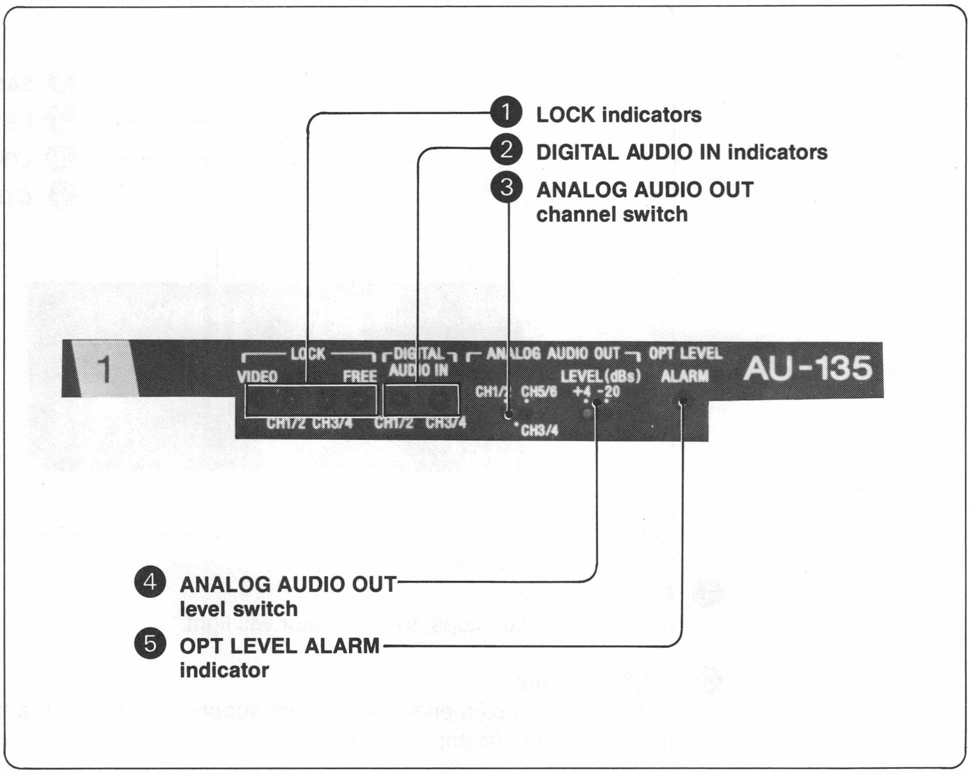
❶ LOCK indicators
❷ DIGITAL AUDIO IN indicators
❸ ANALOG AUDIO OUT channel switch
1
LOCK
VIDEO
FREE
DIGITAL AUDIO IN
ANALOG AUDIO OUT
LEVEL(dBs)
OPT LEVEL
ALARM
AU-135
CH1/2
CH5/6
+4 -20
CH3/4
CH1/2 CH3/4
CH1/2 CH3/4
❹ ANALOG AUDIO OUT level switch
❺ OPT LEVEL ALARM indicator

❶ **LOCK indicators**
These indicators show which signal is being used as the master clock. When FREE is lit, the internal clock in the HDFT-300 optical fiber transmitter is being used.

❷ **DIGITAL AUDIO IN indicators**
These show which channels the external digital audio signals are being input to.

❸ **ANALOG AUDIO OUT channel switch**
This selects the pair of digital audio input signals (channels 1/2, 3/4 or 5/6) to be output from the ANALOG SELECT 1 and SELECT 2 connectors, after conversion to analog.

❹ **ANALOG AUDIO OUT level switch**
Sets the standard output level (+4 dBs or −20 dBs) for the audio signals selected by the ANALOG AUDIO OUT channel switch ❸

❺ **OPT LEVEL ALARM indicator**
This indicator lights when the light level of the signal input to this board is too low.

(D) VA-99 board

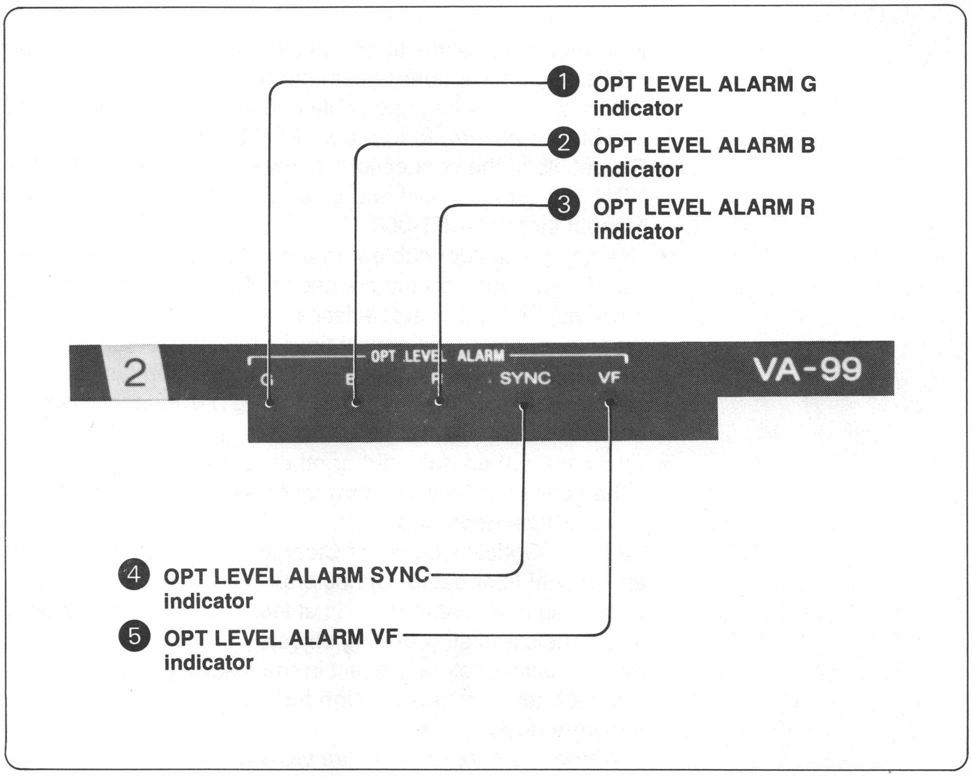
① OPT LEVEL ALARM G indicator
② OPT LEVEL ALARM B indicator
③ OPT LEVEL ALARM R indicator
2
OPT LEVEL ALARM
G
B
R
SYNC
VF
VA-99
④ OPT LEVEL ALARM SYNC indicator
⑤ OPT LEVEL ALARM VF indicator

① **OPT LEVEL ALARM G indicator**
This indicator lights when the light level of the component video G signal from the HDFT-300 optical fiber transmitter is too low.

② **OPT LEVEL ALARM B indicator**
This indicator lights when the light level of the component video B signal from the HDFT-300 optical fiber transmitter is too low.

③ **OPT LEVEL ALARM R indicator**
This indicator lights when the light level of the component video R signal from the HDFT-300 optical fiber transmitter is too low.

④ **OPT LEVEL ALARM SYNC indicator**
This indicator lights when the light level of the command signal (video sync signal) sent to the optical fiber transmitter is too low at the receiving end.

⑤ **OPT LEVEL ALARM VF indicator**
This indicator lights when the light level of the return video signal (viewfinder signal) sent to the optical fiber transmitter is too low at the receiving end.

Note

If any of the alarm indicators above comes on, stop operating the unit, and investigate and remove the cause of the problem. When any of the alarms are on, the operation of the unit cannot be guaranteed. (See the subsequent sections of this manual for details of the maintenance procedure.)

1-3. Connections

Notes on Connections and Installation

- Before making connections, check that the POWER switches on this unit and the HDFT-300 optical fiber transmitter are both off.
- Before disconnecting any cable connected to this unit or the HDFT-300 optical fiber transmitter, be sure to turn both POWER switches off.
- For details of the connections between the HDFT-300 optical fiber transmitter and the HDC-300 camera head and other units, refer to the Operation and Maintenance Manual for the HDFT-300.
- Use an optical fiber cable with a connector boot whose color matches that of the ''OPT'' indication on the connector of this unit. If you use any other cable, it may not have the required characteristics.
- When connecting the optical fiber cable, push the connector on the end of the cable firmly into the OPT connector on this unit, then fasten by turning the retaining ring on the cable connector. The retaining ring prevents the cable from becoming detached; do not fasten it too tightly.
- Take care that no dust, dirt or other foreign body gets into the optical fiber connections. If the connector ends get dirty or scratched, the connector loss will increase, and the signal will be degraded.
  See 1-5 ''Optical Connector Cleaning'' for details on how to clean the OPT connector and optical fiber cable connectors.
- Install this unit so that there is at least a 25 cm (10 inches) gap between the front and rear panels and surrounding objects.
- Do not install or store the unit in the following places:
  - In high temperatures or high humidity.
  - In very dusty places.
  - Where it is subject to severe vibration.
  - Where it is exposed to sunlight or other strong light.
  - In strong electrical or magnetic fields.

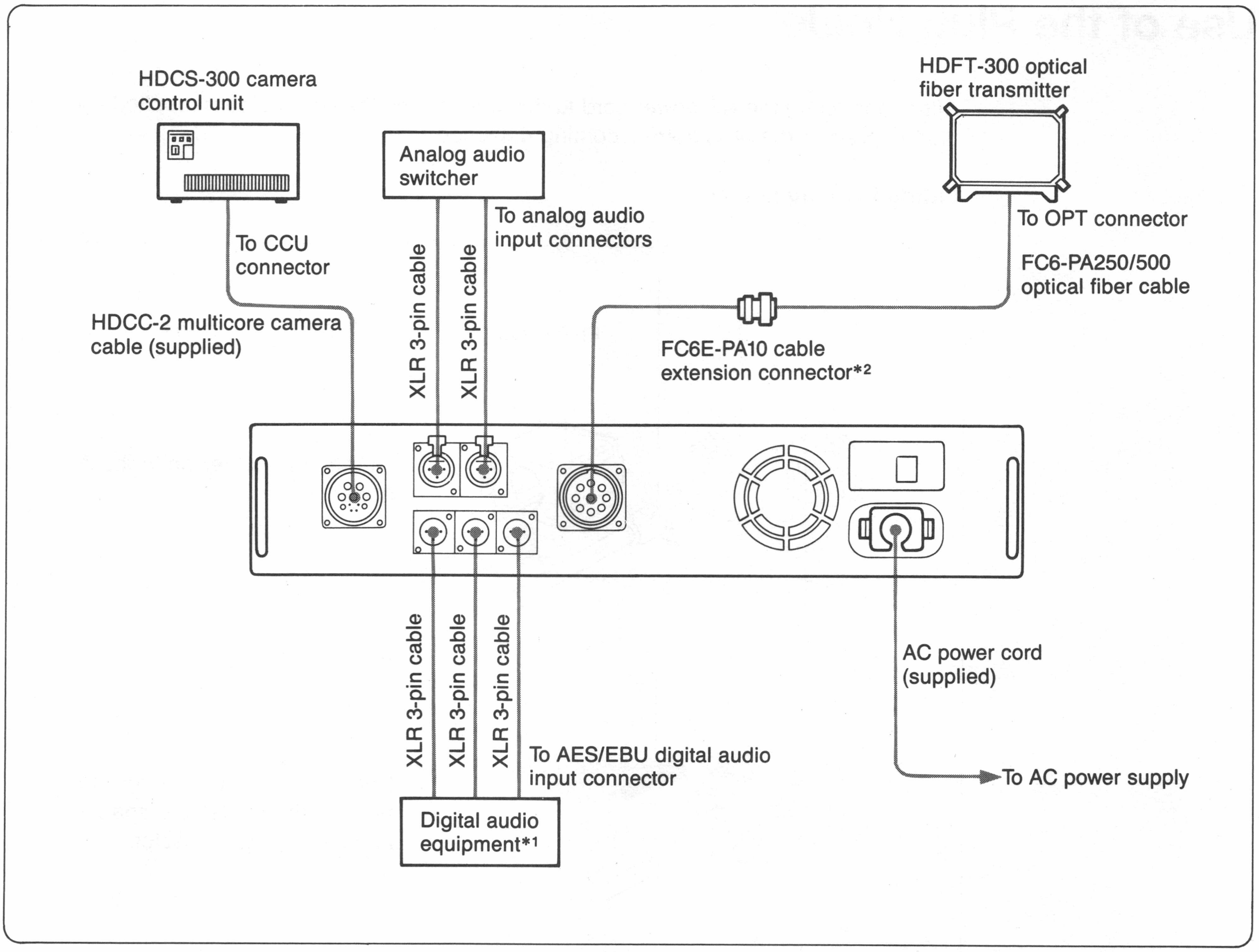
HDCS-300 camera control unit
Analog audio switcher
HDFT-300 optical fiber transmitter
To CCU connector
To analog audio input connectors
To OPT connector
FC6-PA250/500 optical fiber cable
HDCC-2 multicore camera cable (supplied)
XLR 3-pin cable
XLR 3-pin cable
FC6E-PA10 cable extension connector*2
XLR 3-pin cable
XLR 3-pin cable
XLR 3-pin cable
AC power cord (supplied)
To AES/EBU digital audio input connector
To AC power supply
Digital audio equipment*1

[*1] Equipment having AES/EBU standard digital audio output and word sync input, such as Sony's PCM-2000 digital audio recorder.

[*2] The FC6E-PA10 connector joins two optical fiber cables end to end up to a maximum length of 1 km (3280 ft.).

Use of the Plug Holder

After connecting the AC power cord to this unit, attach the plug holder (supplied with the unit) to prevent the plug from becoming detached.

Fitting the plug holder

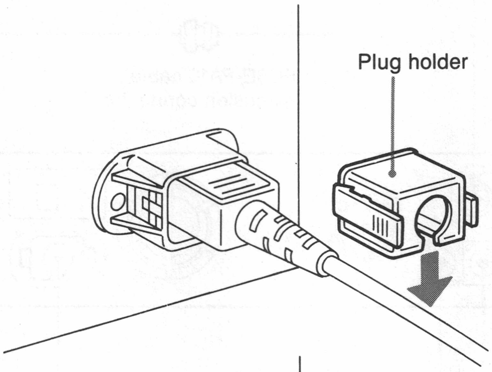

1 Fit the plug holder on to the AC power cord.

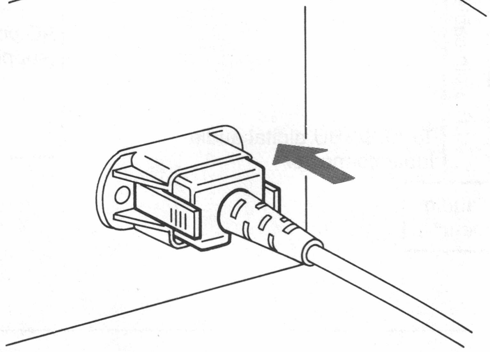

2 Push the plug holder over the plug on the cable, and snap it into the AC IN connector.

Detaching the plug holder

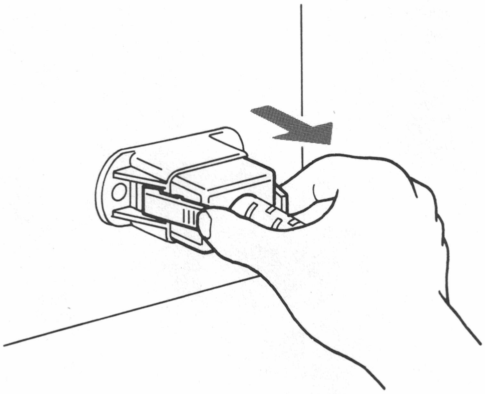

Squeeze the catches on the sides of the plug holder, and pull off.

Voltage Selector Setting

The unit is shipped with the power supply set to 100–120 V. Before using it with a 220–240 V supply, change the setting using the VOLTAGE SELECTOR switch.

Changing the setting

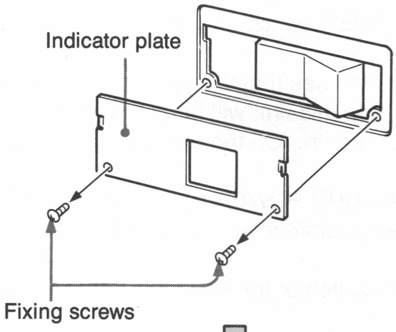
Indicator plate
Fixing screws

1 Remove the fixing screws and indicator plate.

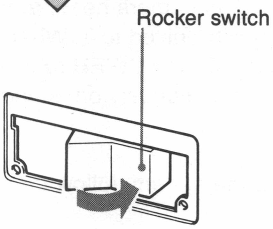
Rocker switch

2 Change the setting of the rocker switch.

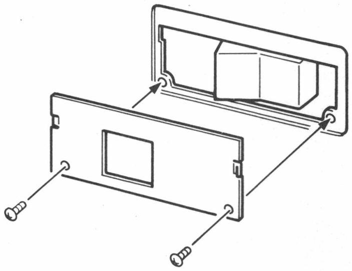

3 Replace the indicator plate and fixing screws.

1-4. Operation

1 Check that the connections and settings on this unit and the HDFR-300 optical fiber transmitter are correct.

2 Turn on the MAIN POWER switch on the HDCS-300 camera control unit.

3 Turn on the POWER switch on the HDCO-300 control panel.

4 Turn on the POWER switch on this unit.
The POWER indicator will light.

5 Turn on the POWER switch on the HDFT-300 optical fiber transmitter.

6 Turn on the CHU POWER switch on the HDCO-300 control panel. The switch will begin to flash.
Once the system determines that the appropriate load is connected to the HDFT-300 optical fiber transmitter, this unit will begin supplying power to the transmitter, and the OPR indicator will come on. (On the optical fiber transmitter, the POWER indicator will light.)
(If you then press the CHU POWER switch on the HDCO-300 control panel again, the power supply to the transmitter will be cut off.)

7 Turn on the POWER switch of the HDC-300 camera head, and the camera system is ready to operate.
The command signal (video sync signal) is sent from the HDCS-300 camera control unit to the HDC-300 camera head, and the camera returns the GBR component video signals synchronized to it. When this happens, that is when the system is synchronized, the CHU POWER switch on the HDCO-300 control panel changes from flashing to continuously on, to indicate that the system is now operating normally.

When powering off the system, follow the reverse order to the procedure above.

1-5. Optical Connector Cleaning

If the OPT connector on this unit or the HDFT-300 optical fiber transmitter, or the connectors on the FC6-PA250/500 optical fiber cable get dirty, the connection loss will increase, and the signal quality will go down. If you discover a degradation in signal quality, use the following procedure to clean these connectors.

1. Use an appropriate high pressure purified and dried gas (such as pure nitrogen).
2. Point the nozzle slightly upward, and lightly expel some gas to check that no dirt or liquid is being produced.
3. Direct the jet of gas at the connector, to remove dirt and dust.

Notes

- Do not allow the nozzle to come in direct contact with the end of the connector.
- If this method does not remove the dirt, follow the cleaning procedure described in or after Section 2.

1-6. Specifications

System

Light emitting element	AlGaAs LED (λ = 0.85 µm)
Photoreceptor element	Si PIN-PD
Modulation method	Baseband direct luminance modulation
Video signals	
Frequency bandwidth	60 Hz to 30 MHz
S/N	47 dB minimum
Linearity	2% or less (to 100% level)
Audio signals	
Frequency bandwidth	20 Hz to 20 kHz
S/N	55 dB minimum (1 kHz reference level) (MIC input) 65 dB minimum (1 kHz reference level) (LINE input)
Distortion	0.05% maximum (1 kHz reference level)
Headroom	20 dB minimum

HDFR-300

Power supply	90–130 V AC or 180–260 V AC switchable (50/60 Hz)
Power consumption	400 W (max.)
Input signals	
Command signal (video sync signal) (11-pin connector)	0.3 Vp-p, 75 ohms unbalanced, positive polarity
Return video signal (viewfinder signal) (11-pin connector)	1 Vp-p, 75 ohms unbalanced, positive polarity
Output signals	
GBR component video signals (11-pin connector)	1 Vp-p, 75 ohms unbalanced, positive polarity
Audio signals	Analog (2 XLR 3-pin connectors, 2 channels) Balanced +4 dBs/−20 dBs output level switchable (Output selectable from any of the 3 input pairs) Digital (3 XLR 3-pin connectors, 6 channels) AES/EBU format
Operating temperature	0°C to 40°C (32°F to 104°F)
Dimensions (w/h/d)	424 × 88 × 450 mm (16¾ × 3½ × 17¾ inches)
Weight	14 kg (30 lb 14 oz)

Accessories supplied

Extension board (1)
AC power cords (with and without 3-pin plug fitted) (1 each)
Plug holder (1)
2-pin/3-pin adaptor (1)
Rack mounting kit (1)
HDCC-2 multicore camera cable (1)
Audio output connector conversion kit (for female connectors with harness) (1)
Operation and maintenance manual (1)

Design and specifications are subject to change without notice.

Accessory not supplied

FC6E-PA10 cable extension connector

(2)

第2章
設　置

2-1.　開梱と再梱包

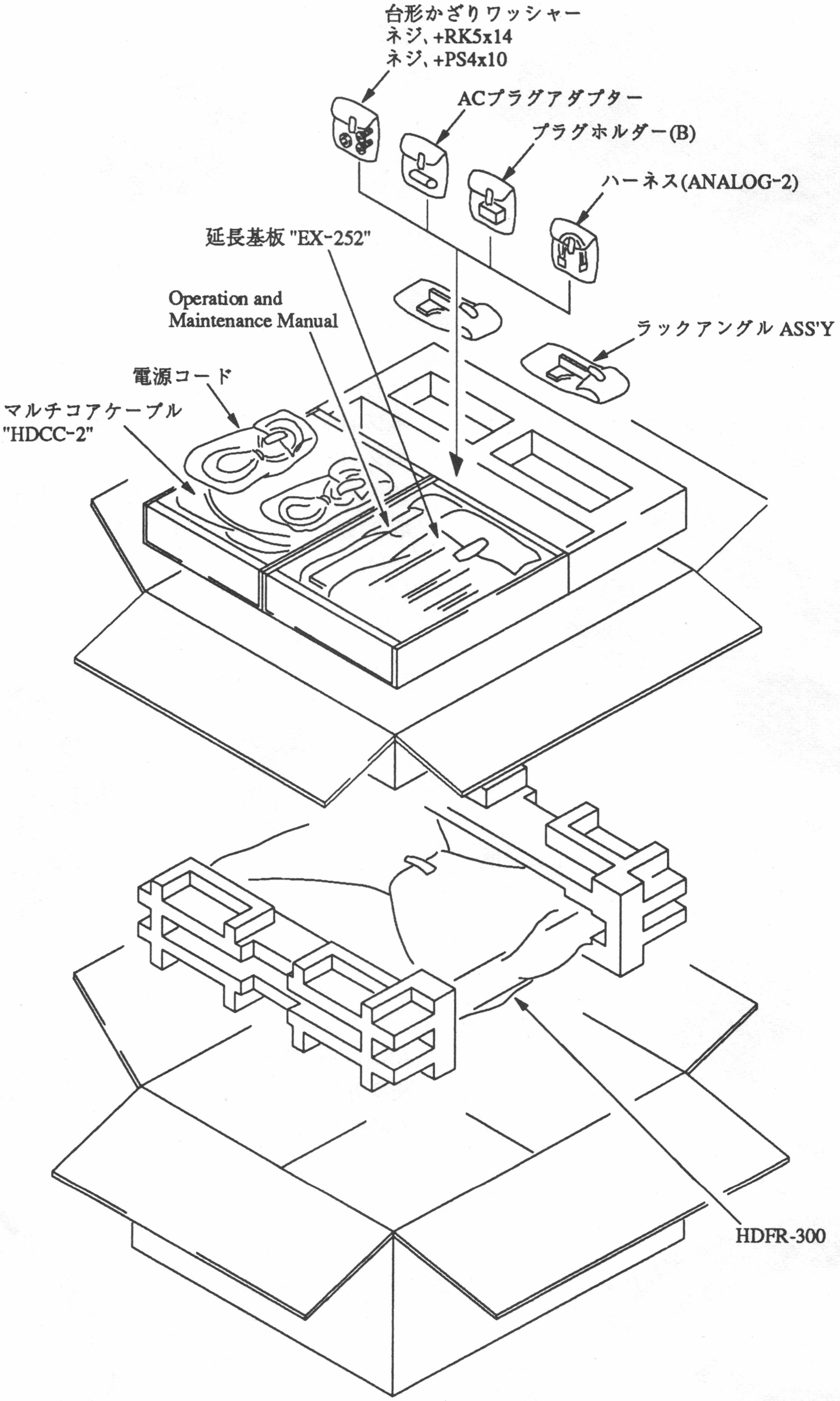
台形かざりワッシャー
ネジ、+RK5x14
ネジ、+PS4x10
ACプラグアダプター
プラグホルダー(B)
ハーネス(ANALOG-2)
延長基板 "EX-252"
Operation and Maintenance Manual
ラックアングル ASS'Y
電源コード
マルチコアケーブル "HDCC-2"
HDFR-300

2-2.　標準付属品

延長基板 "EX-252"：1個
カード基板の点検および修理時に使用します。

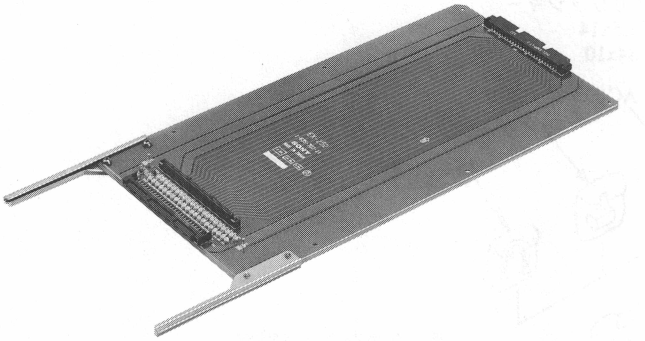

電源コード：2本
3Pプラグ付きと先バラの2種類を付属しているので使用する電源コンセントにより使い分けて下さい。

ACプラグアダプター "3P-2P"：1個
3Pプラグ付き電源コードを2ピンの電源コンセントに変換する時に使用します。

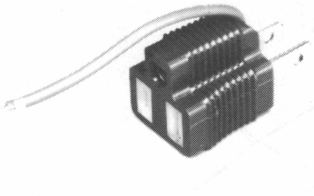

マルチコアケーブル "HDCC-2"：1本
HDCS-300と本体を接続するためのケーブルです。

プラグホルダー (B)：1個
電源コードの抜け落ち防止のためのホルダーです。

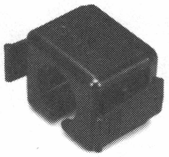

ラックアングル (2U) ASSY：1組
台形かざりワッシャーϕ5用：4個
ネジ +RK 5×14：4個
ネジ +PS 4×10：8個
19インチラックに収納する際に使用します。
取り付け方は2-4-3. 19インチラックマウントを参照して下さい。

ハーネス (ANALOG-2)：1本
ANALOG OUTコネクタの交換用のハーネスです。
交換方法は、2-4-4. 付属ハーネス (ANALOG-2) の交換方法を参照して下さい。

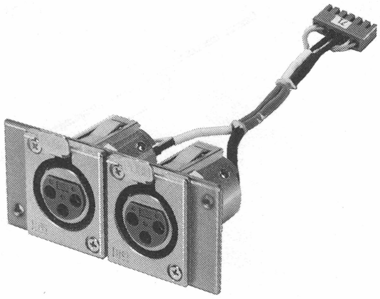

OPERATION & MAINTENANCE MANUAL：1冊

2-3. 適合コネクター/ケーブル

2-3-1. コネクターの入出力信号

主なコネクターの入出力信号は次の通りです。

CCU (11P, MALE)

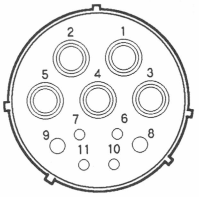

OPTICAL (8P, FEMALE)

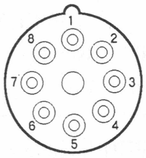

PIN No.	SIGNAL	REMARK for SIGNAL
1	COMMAND IN	SERIAL DATA for CAMERA Control
2	RETURN VIDEO IN	Zi=75Ω 1.0 Vp-p
3	R (VA) VIDEO OUT	V 0.7 Vp-p, 75Ω
4	G (VA) VIDEO OUT	V 0.7 Vp-p, 75Ω
5	B (VA) VIDEO OUT	V 0.7 Vp-p, 75Ω
6	⊕POWER SENSE OUT	DC+10.6 V～+25 V
7	⊖POWER SENSE OUT	
8	REG (+17 V) IN	DC+10.6 V～+25 V
9	GND (+17 V)	3A
10	NC	Non connection
11	NC	

PIN No.	SIGNAL	REMARK for SIGNAL
1	High Volt. IN (+)	DC+100 V～+200 V
2	OPT. R-CHV IN	OPT. Sig
3	OPT. B-CH IN	
4	OPT. G-CH IN	
5	High Volt. IN (–)	DC+100 V～+200 V
6	OPT. SYNC-CH OUT	OPT. Sig
7	OPT. VF-CH OUT	
8	OPT. D-AUD-CH IN	

DIGITAL OUT (3P, MALE)

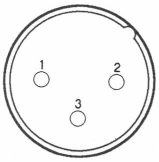

ANALOG OUT (3P, FEMALE)
(3P, MALE)

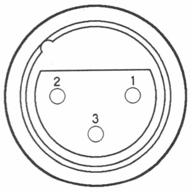

(supplied parts)

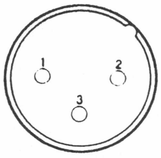

PIN No.	SIGNAL	REMARK for SIGNAL
1	D-AUD OUT (G)	AES/EBU Digital Audio interface
2	D-AUD OUT (+)	
3	D-AUD OUT (–)	

PIN No.	SIGNAL	REMARK for SIGNAL
1	A-AUD OUT (G)	Zo = Low
2	A-AUD OUT (X)	
3	A-AUD OUT (Y)	

2-3-2. 接続コネクター

設置時、サービス時等において、コネクターパネル部の各種コネクターにケーブルを接続する際には、その先端に次に記すコネクター又は同等品を使用して下さい。

コネクターの機能名称	接続するケーブル側のコネクターの部品番号および名称	
CCU (11P, FEMALE)	1-564-916-11 HDCC PLUG, 11P FEMALE 7-613-099-30 TV CCX CABLE or HDCC cable assembly HDCC-2 (2 m/6.4 feet)	
OPTICAL (8P, FEMALE)	OPTICAL FIBER cable assembly ※ FC6-PA250 (250 m) FC6-PA500 (500 m)	
ANALOG SELECT OUT (3P, FEMALE) (or 3P, MALE)	1-508-084-11 XLR-3P, MALE or CANNON XLR-3-12C	(1-508-083-11 XCR-3P, FEMALE) (CANNON XLR-3-11C)
DIGITAL OUT (3P, MALE)	1-508-083-11 XLR-3P, FEMALE or CANNON XLR-3-11C	

※ OPTICAL FIBER cableはプラグの交換はできません。

2-3-3. HDCCコネクターの外し方

Step 1.
ビスを外す。

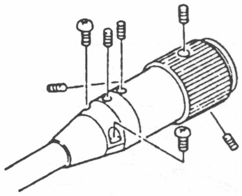

Step 2.
コネクターをカメラ又はプロセッサーに接続し， 固定する。

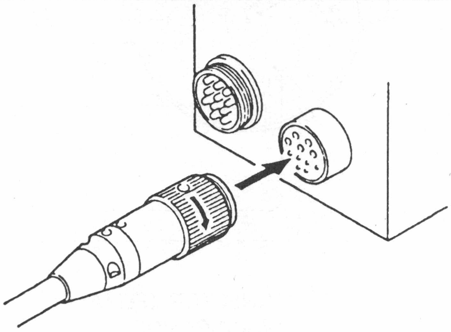

Step 3.
反時計方向に回し，コネクターをゆるめる。

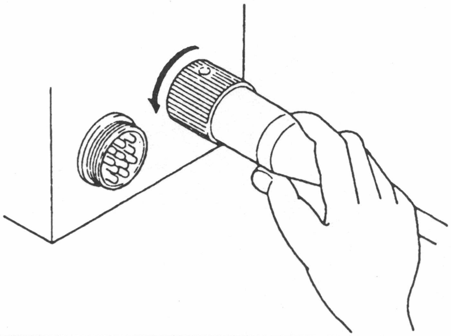

Step 4.
あとは手で外れます。

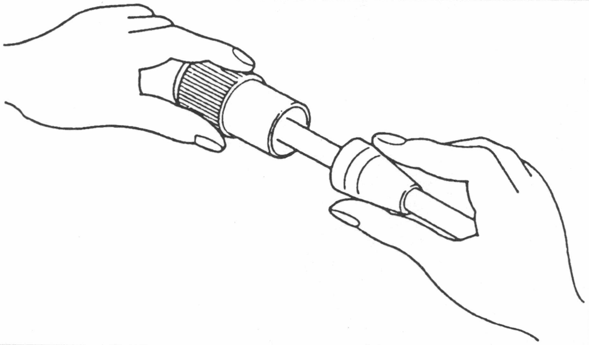

Step 5.
左図のように分解されます。

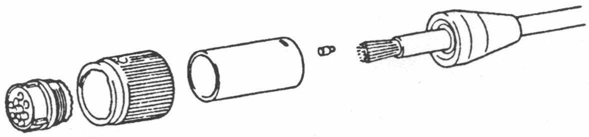

2-3-4.　ケーブルの結線

HDCCケーブル

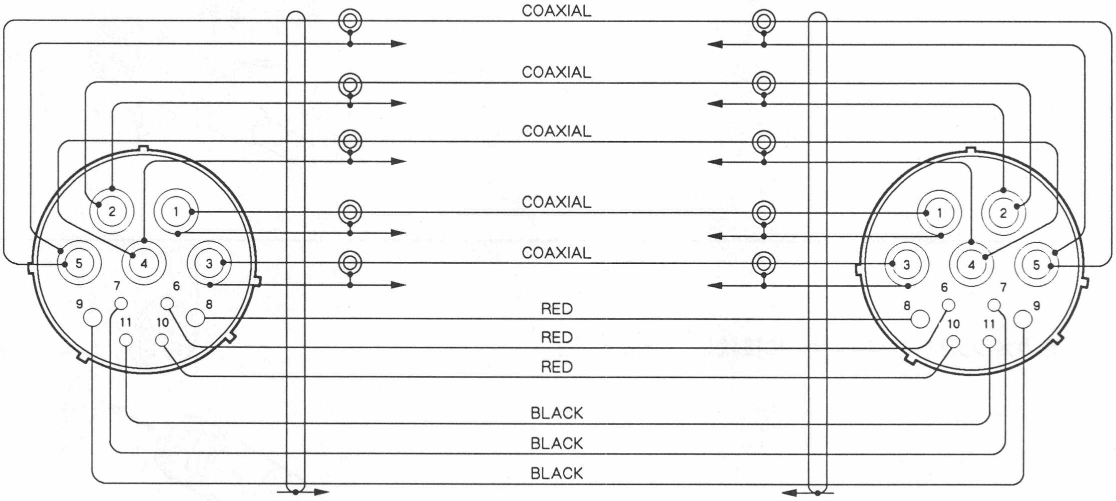
COAXIAL
COAXIAL
COAXIAL
COAXIAL
COAXIAL
RED
RED
RED
BLACK
BLACK
BLACK
1
2
3
4
5
6
7
8
9
10
11

11P CONNECTOR (FEMALE)
(WIRING SIDE)

11P CONNECTOR (MALE)
(WIRING SIDE)

2-4. 設置

2-4-1. 設置環境

動作温度　0°～ +40℃
保存温度
湿度

- できるだけ乾燥した、風通しの良い場所に置いて下さい。
- 次のような場所は避けて下さい。
  1. 高温の部屋、熱源の近く
  2. ホコリや振動の激しい場所
  3. 直射日光や強力なライト等が直接当たる所
  4. 強電界、強磁場の所
- できるだけ上部を上に向けて設置してください。
- 前方と後方は壁等から25cm以上離して通風を良くしてください。
- 光ファイバーケーブルの延線と巻き取り時は80kg以上の張力をかけないようにしてください。

2-4-2. 外形寸法

単位記号: mm

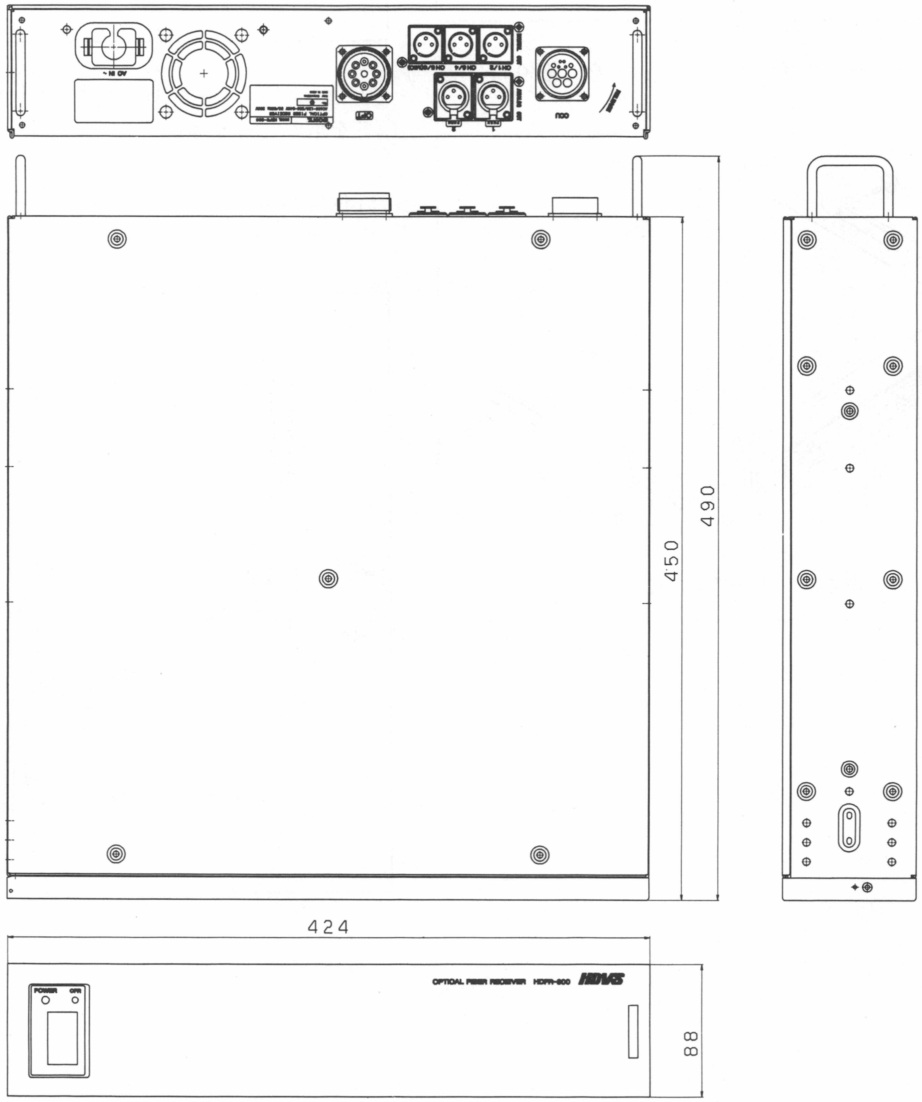
AC IN ~
CCU
490
450
424
88
OPTICAL FIBER RECEIVER HDFR-300 HDVS
POWER
OPR

2-4-3. 19インチラックマウント

HDFR-300は、付属のラックアングルASSYを使ってEIA標準の19インチラックに収納できます。

(1) ラックアングルを取り付けます。

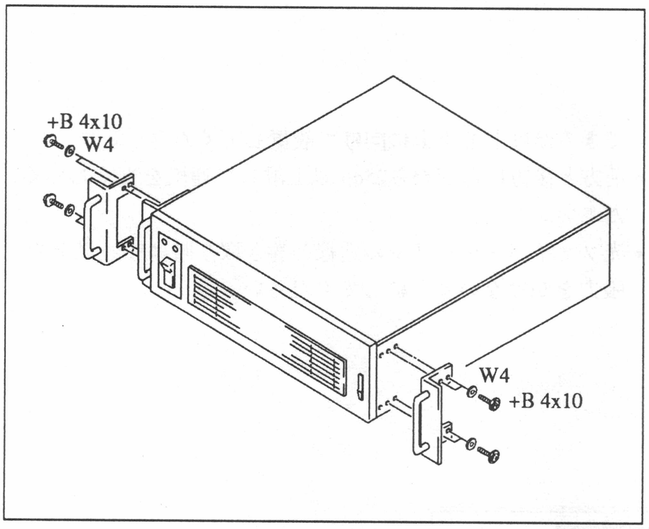
+B 4x10
W4
W4
+B 4x10

(2) 別表スライドレールのインナーメンバーを、取り付けます。

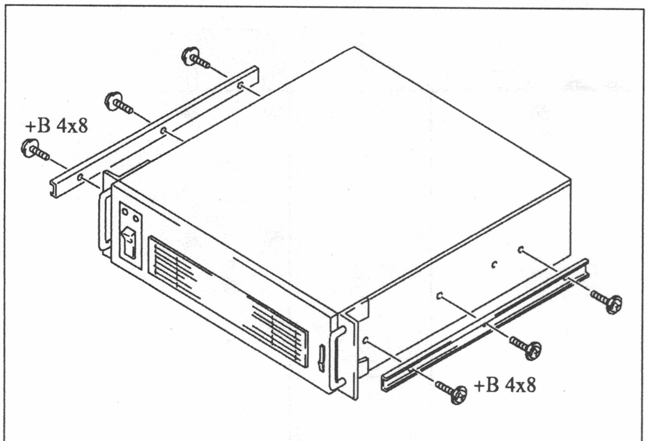

推奨レール：モデル305 18, 22インチ

(3) 脚4本を、外します。

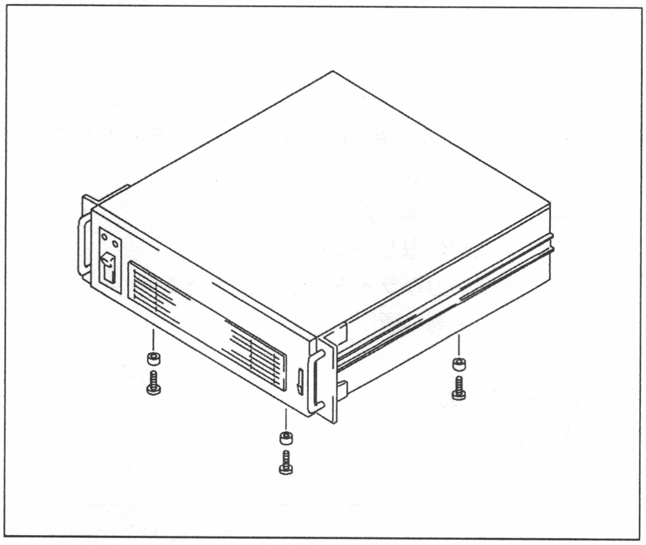

(4) ラックにブラケットとスライドレールのアウターメンバーを取り付けます。

(5) 付属のネジとかざりワッシャーを使ってラックと固定します。

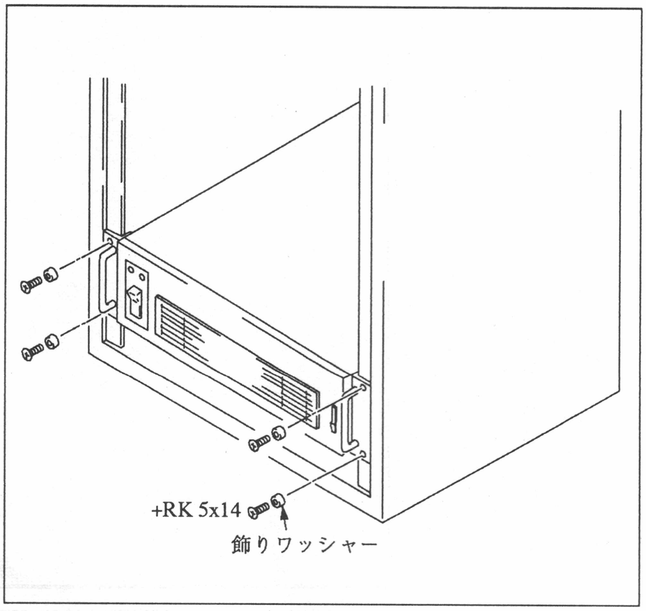
+RK 5x14
飾りワッシャー

2-4-4. 付属ハーネス (ANALOG-2) の交換方法

(1) トップパネルを外します。

(2) ネジ (+BVTT 3×8) とコネクターCN71を、外しハーネス (ANALOG-1) を取り外します。

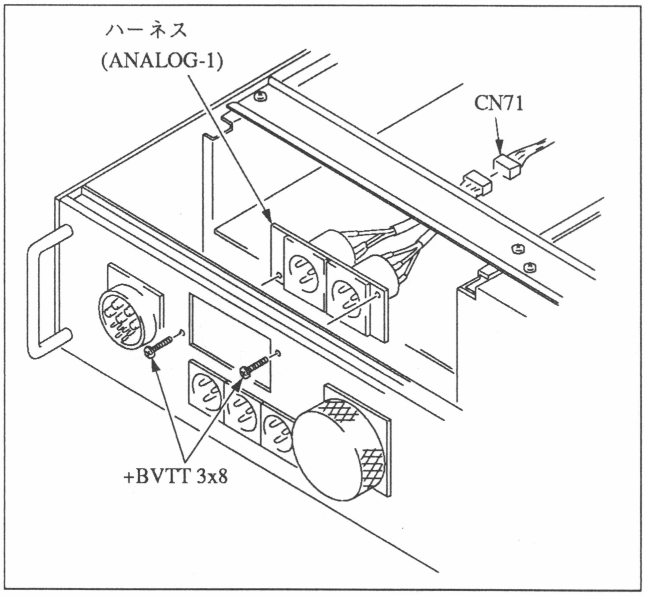
ハーネス
(ANALOG-1)
CN71
+BVTT 3x8

(3) 付属のハーネス (ANALOG-2) を、(1)～ (2) の逆の手順で取り付けます。

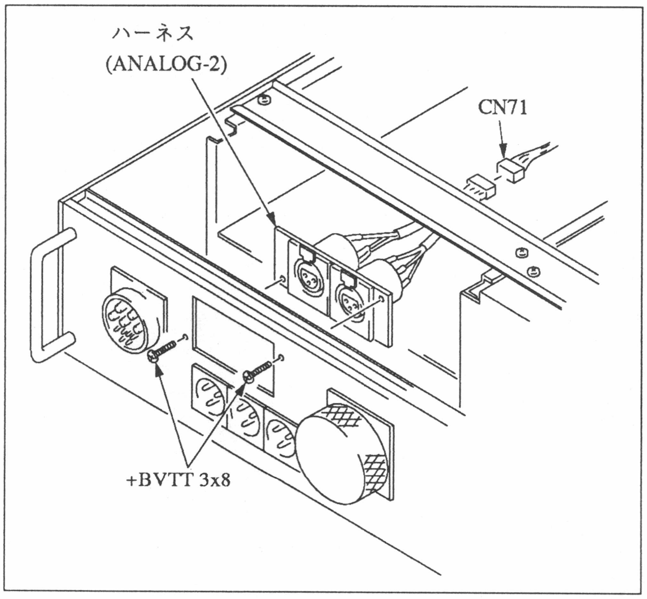
ハーネス
(ANALOG-2)
CN71
+BVTT 3x8

2-5. 基板内スイッチの設定

- AU-135基板

S1 (ANALOG AUDIO OUT CHANNEL)
3系統のディジタルオーディオのうち、どのCHをアナログ出力するかを選択するスイッチです。

S2 (ANALOG AUDIO OUT LEVEL)
アナログ出力の基準レベルを+4d Bsにするか-20 dBsにするかを選択するスイッチです。

2-6. SYSTEM CONFIGRATION

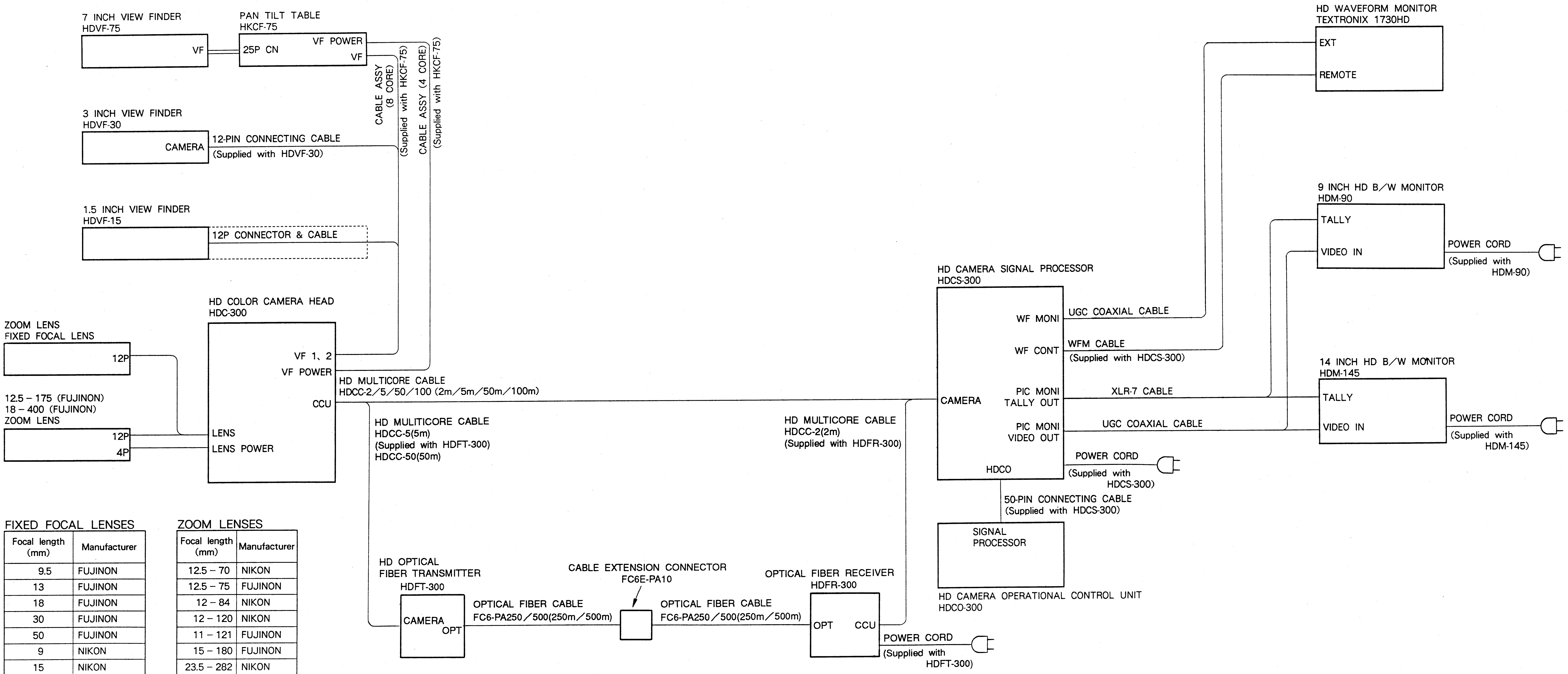
7 INCH VIEW FINDER
HDVF-75
VF
PAN TILT TABLE
HKCF-75
25P CN
VF POWER
VF
CABLE ASSY (8 CORE)
(Supplied with HKCF-75)
CABLE ASSY (4 CORE)
(Supplied with HKCF-75)
3 INCH VIEW FINDER
HDVF-30
CAMERA
12-PIN CONNECTING CABLE
(Supplied with HDVF-30)
1.5 INCH VIEW FINDER
HDVF-15
12P CONNECTOR & CABLE
ZOOM LENS
FIXED FOCAL LENS
12P
12.5 – 175 (FUJINON)
18 – 400 (FUJINON)
ZOOM LENS
12P
4P
HD COLOR CAMERA HEAD
HDC-300
VF 1、2
VF POWER
CCU
LENS
LENS POWER
HD MULTICORE CABLE
HDCC-2/5/50/100 (2m/5m/50m/100m)
HD MULITICORE CABLE
HDCC-5(5m)
(Supplied with HDFT-300)
HDCC-50(50m)
HD OPTICAL
FIBER TRANSMITTER
HDFT-300
CAMERA
OPT
OPTICAL FIBER CABLE
FC6-PA250/500(250m/500m)
CABLE EXTENSION CONNECTOR
FC6E-PA10
OPTICAL FIBER CABLE
FC6-PA250/500(250m/500m)
OPTICAL FIBER RECEIVER
HDFR-300
OPT
CCU
POWER CORD
(Supplied with
HDFT-300)
HD MULTICORE CABLE
HDCC-2(2m)
(Supplied with HDFR-300)
HD CAMERA SIGNAL PROCESSOR
HDCS-300
WF MONI
WF CONT
CAMERA
PIC MONI
TALLY OUT
PIC MONI
VIDEO OUT
HDCO
UGC COAXIAL CABLE
WFM CABLE
(Supplied with HDCS-300)
XLR-7 CABLE
UGC COAXIAL CABLE
POWER CORD
(Supplied with
HDCS-300)
50-PIN CONNECTING CABLE
(Supplied with HDCS-300)
SIGNAL
PROCESSOR
HD CAMERA OPERATIONAL CONTROL UNIT
HDCO-300
HD WAVEFORM MONITOR
TEXTRONIX 1730HD
EXT
REMOTE
9 INCH HD B/W MONITOR
HDM-90
TALLY
VIDEO IN
POWER CORD
(Supplied with
HDM-90)
14 INCH HD B/W MONITOR
HDM-145
TALLY
VIDEO IN
POWER CORD
(Supplied with
HDM-145)

FIXED FOCAL LENSES

Focal length (mm)	Manufacturer
9.5	FUJINON
13	FUJINON
18	FUJINON
30	FUJINON
50	FUJINON
9	NIKON
15	NIKON
21	NIKON
30	NIKON
50	NIKON

ZOOM LENSES

Focal length (mm)	Manufacturer
12.5 – 70	NIKON
12.5 – 75	FUJINON
12 – 84	NIKON
12 – 120	NIKON
11 – 121	FUJINON
15 – 180	FUJINON
23.5 – 282	NIKON
12.5 – 175	FUJINON
18 – 400	FUJINON

第3章
サービスインフォメーション

3-1. 基板配置図

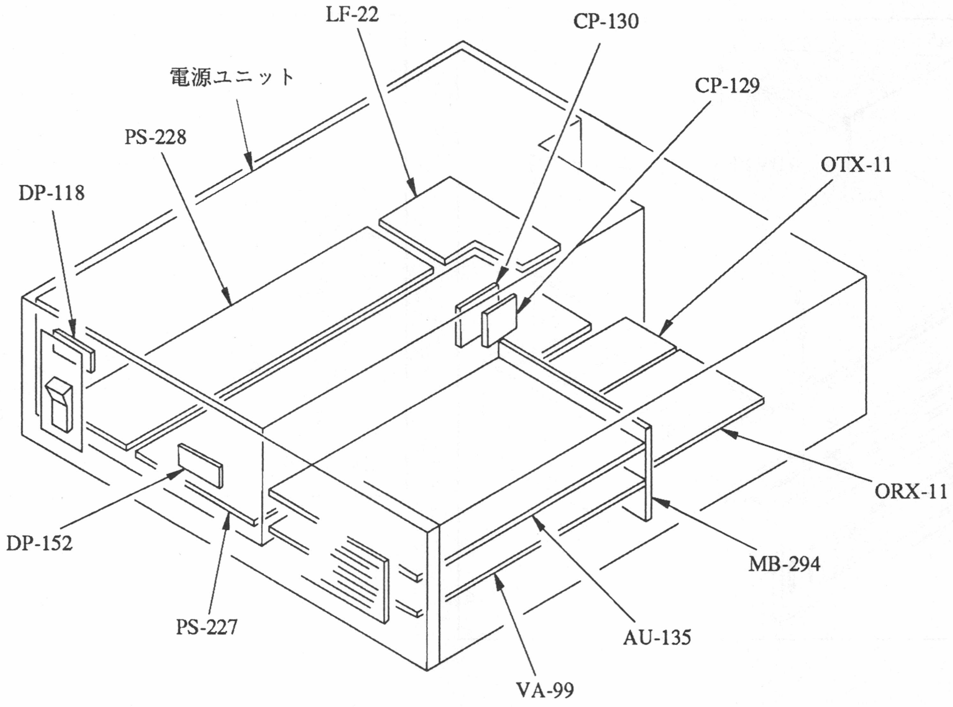
LF-22
CP-130
電源ユニット
CP-129
PS-228
OTX-11
DP-118
ORX-11
DP-152
MB-294
PS-227
AU-135
VA-99

3-2.　主要部品の交換方法

3-2-1.　トップパネルの取り外し

ネジ (+BVTT　3×5) を6本外し、本体よりトップパネルを、外します。

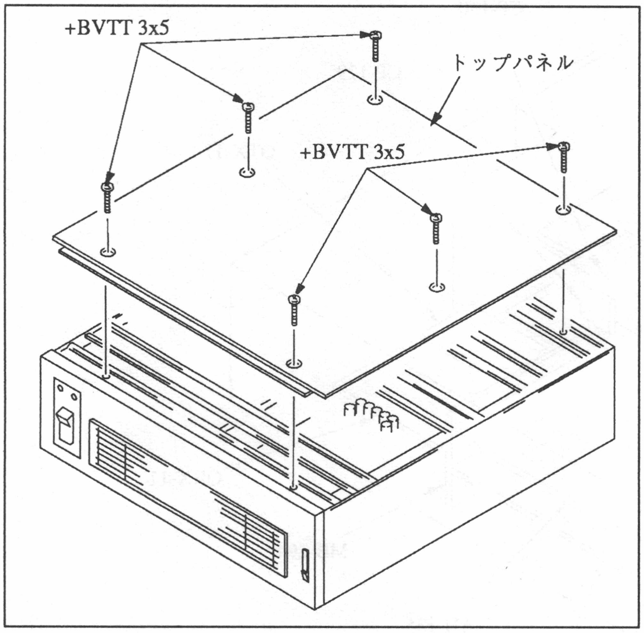
+BVTT 3x5
トップパネル
+BVTT 3x5

3-2-2.　電源ユニットの取り外し

ネジ (+BVTT　3×6) を4本外し、電源ユニットを引き出します。

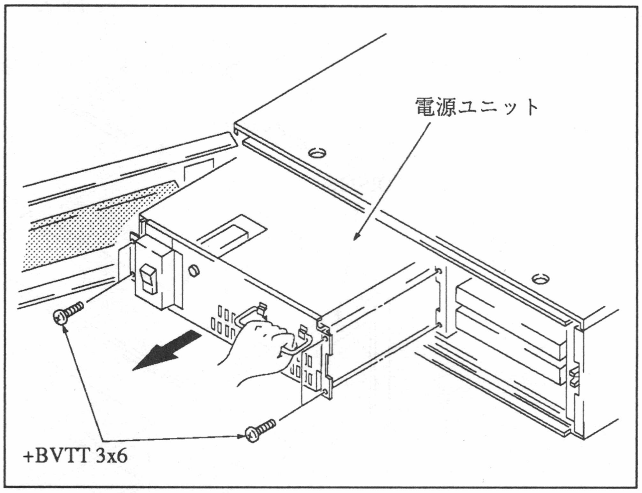
電源ユニット
+BVTT 3x6

3-2-3.　コネクターパネルの取り外し

(1)　トップパネルを、取り外します。
(2)　ネジ (+BVTT 3×5) 6本と、各々のコネクターを外し、
　　コネクターパネルを取り外します。

- CCUコネクターからのハーネスの外し方は3-2-4.を、OPTICAL コネクターからのハーネスの外し方は、3-2-5.を参照して下さい。

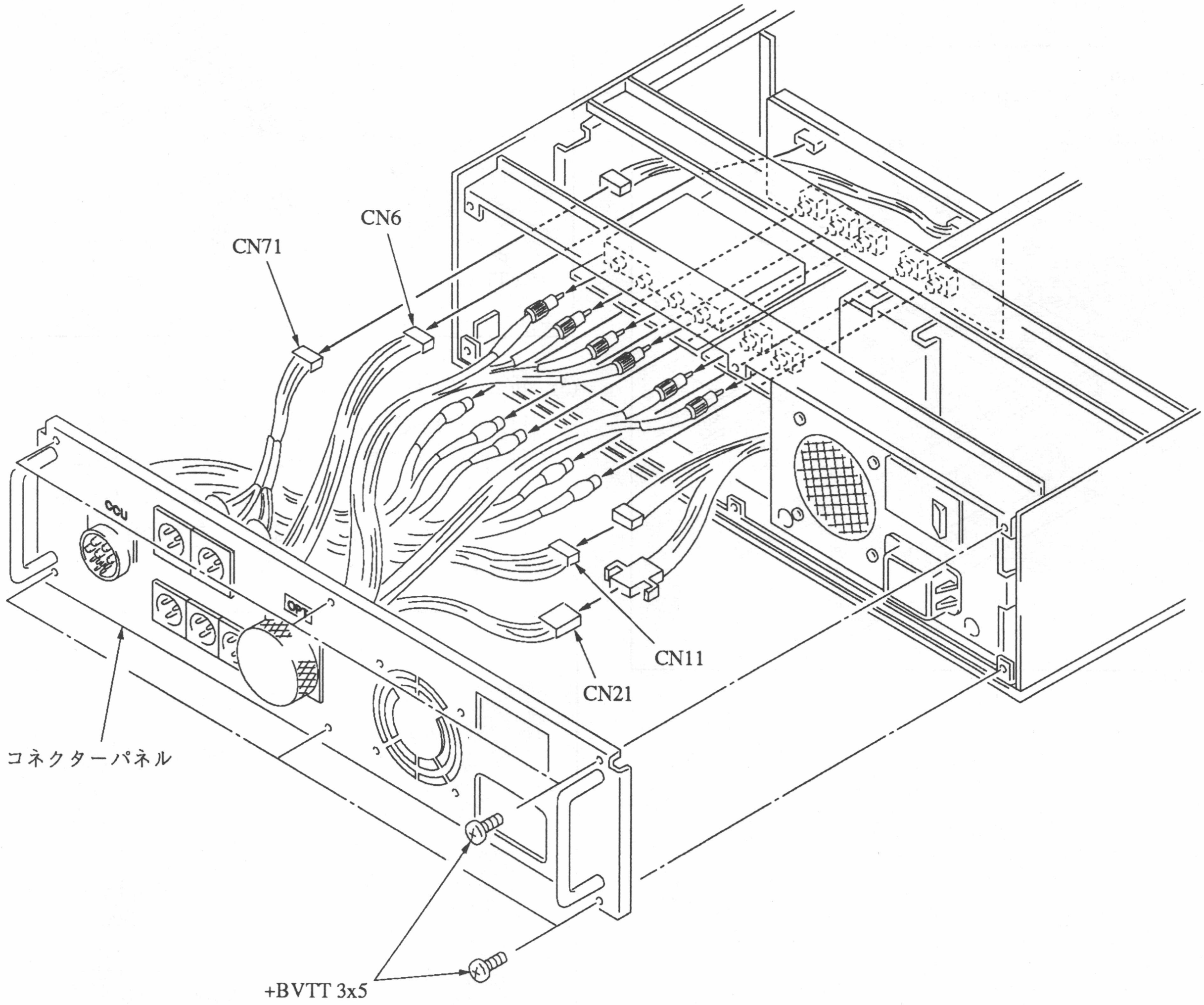
CN71
CN6
CCU
OPT
CN11
CN21
コネクターパネル
+BVTT 3x5

3-2-4.　CCUコネクターの交換方法

(1)　トップパネルを取り外します。

(2)　ネジ (+BVTT 3×5 2本、+BVTT 3×6 2本) を外し、ハーネス補正板Assy、ORX-11基板、OTX-11基板を外します。

注意) OTX-11基板とORX-11基板を外すとき、光ファイバーコード及び光コネクタ部に無理な力が加わらないように、十分に注意して取り扱い下さい。光ファイバーコードは引っ張ったりはさみこんだり、最小径が30 mmφ以下に曲げないようにして下さい。

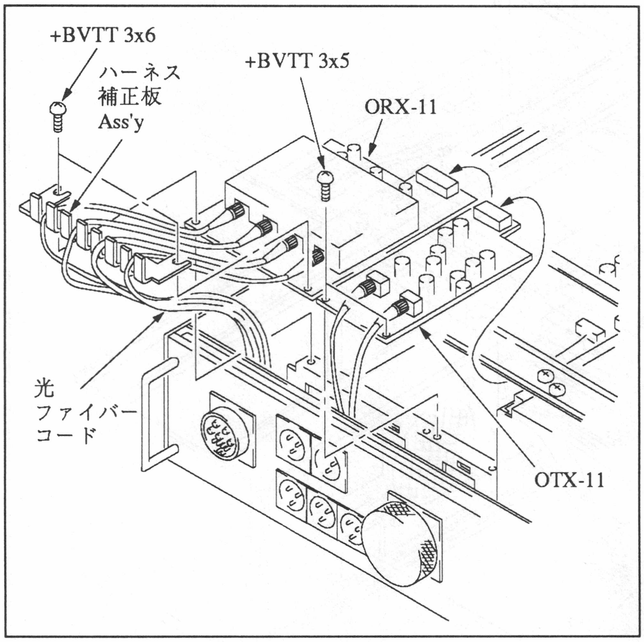
+BVTT 3x6
ハーネス補正板Ass'y
+BVTT 3x5
ORX-11
光ファイバーコード
OTX-11

(3)　コネクターCN11とMB-294基板のコネクターCN101～CN501を外します。

(4)　ネジ(+BVTT 3×5) を4本外しCCUコネクターを、ハーネスごと取り外します。

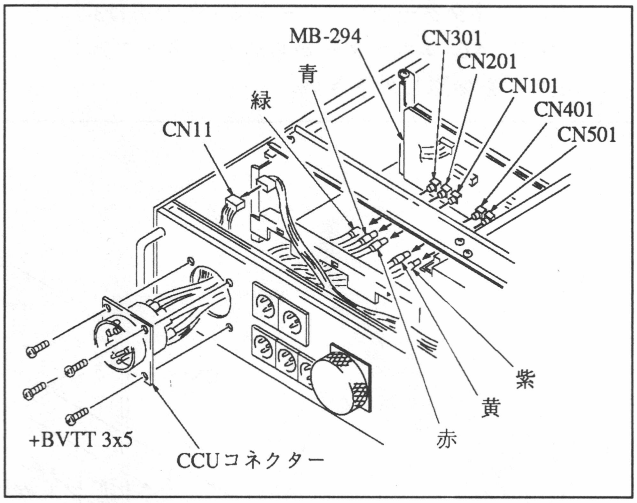
MB-294
CN301
CN201
CN101
CN401
CN501
青
緑
CN11
紫
黄
赤
+BVTT 3x5
CCUコネクター

(5)　新しいCCUコネクター (ソニー部品番号：1-946-217-11) を (1)～(4) の逆の手順で取り付けます。

注1;ハーネス補正板Assyを取り付ける際には、図のようにカラーチューブの後端が、ハーネス補正板Assyのくし歯部分より、内側になるように取り付けて下さい。

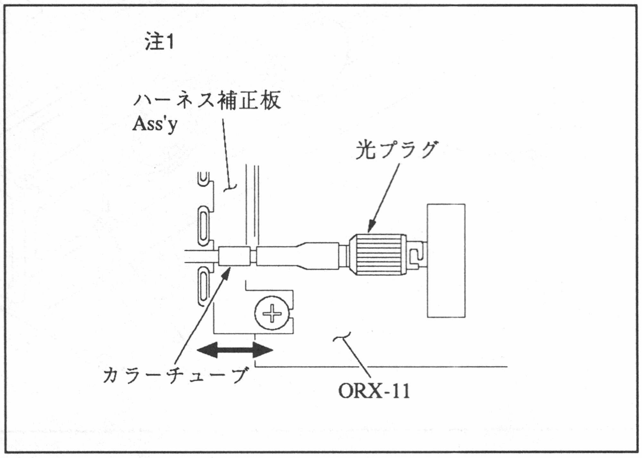
注1
ハーネス補正板Ass'y
光プラグ
カラーチューブ
ORX-11

3-2-5. OPTICALコネクターの交換方法

(1) トップパネルを取り外します。

(2) ORX-11基板のD101～D401とOTX-11基板のD101, D201より光プラグを抜きます。

(3) コネクターCN21を外します。

(4) ダストキャップを開け、ネジ(+B 3x6)を4本外しOPTICALコネクターをハーネスごと取り外します。

注1;光プラグを抜く時は、光ファイバーコードは絶対に持たないで図のように光プラグを直接持って抜いて下さい。

注2;光ファイバーコードを取り扱う時は、引っぱったりはさみこまないようにして下さい。又、最少径が30 mmより小さく曲げないようにして下さい。

(5) 新しいOPTICALコネクター(ソニー部品番号：A-7602-076-A)の防塵キャップを外し、(1) ~ (4) の逆の手順で取り付けます。

注3;防塵キャップを外す時は、光ファイバーコードは絶対に持たないで、図のように光プラグを持ち防塵キャップを引き抜いて下さい。

注4;光プラグを差し込む時は、図のように光プラグを直接持って差し込んで下さい。

注5;図のように光プラグを取り付けた時に、カラーチューブの後端がハーネス補正板Assyのくし歯部分より内側になるようにハーネス補正板Assyを取り付けて下さい。

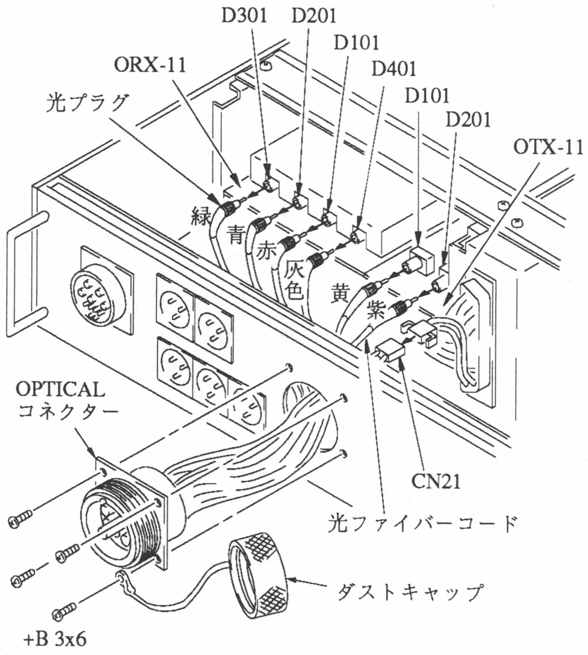
D301
D201
D101
D401
D101
D201
ORX-11
OTX-11
光プラグ
緑
青
赤
灰色
黄
紫
OPTICAL
コネクター
CN21
光ファイバーコード
ダストキャップ
+B 3x6

注 1

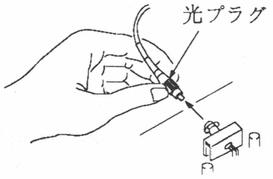

注 2

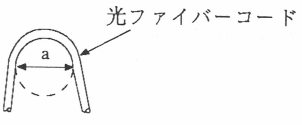
光ファイバーコード
a

a ＝30mm以上

注 3

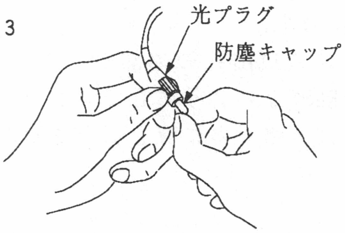
光プラグ
防塵キャップ

注 4

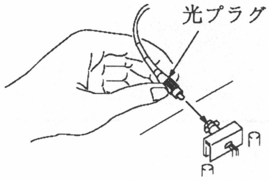

注5

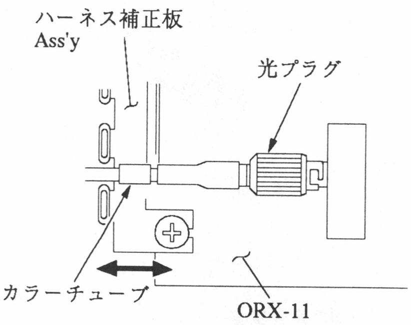
ハーネス補正板
Ass'y
光プラグ
カラーチューブ
ORX-11

3-3. 点検および保守

3-3-1. OPTICALコネクターのクリーニング

OPTICALコネクターおよび光ファイバーケーブル端のプラグ、中間アダプターなどが汚れると伝送信号が劣化します。従って、下記要領とサービス上の注意事項を参照して定期的にクリーニングを行ってください。

(1) 高圧ガスによるクリーニング方法
定期的に行う軽い汚れに対応する方法です。
- 清浄高圧ガス（フィルターに通された窒素ガスなど）を、少し上に向けて軽く噴射し、液体や油脂等が噴出しないことを確認します。
- 下図の場所に高圧ガスを噴射してゴミ等を吹き飛ばします。(図②はリセプタクルインサートをつけたままで行います。)

注1：ガス噴出孔の端部が、コネクター端子部に触れないようにして下さい。
注2：ガス噴射中に液を噴出させないで下さい。

(2) エチルアルコールによるクリーニング法
高圧ガスでクリーニングしても汚れが取り除けなかった場合に行います。この場合、光ファイバーの先端部やアダプターを傷つけたり、綿ぼこりを残したりするので十分注意して行って下さい。
- エチルアルコールを十分にしみこませたきれいな綿棒で、下図の場所を軽く拭きます。(図②はリセプタクルインサートをつけたままで行います。)
- クリーニング後高圧ガスを軽く噴出させて、アルコール分を吹き飛ばします。

(3) 以下の方法でもOPTICALコネクター部の汚れがとれない場合は図②のようにリセプタクルインサートを外して高圧ガスやエチルアルコールでクリーニングします。クリーニング後は、リセプタクルインサートの穴と光ファイバー先端部との位置が合っているのを確認してからリセプタクルインサートを押し込み、元の位置に戻します。そして中心のねじを締めて固定して下さい。このとき、光ファイバー先端部とリセプタクルインサートがぶつかって光ファイバー先端部を傷つける可能性が高いので、必要なとき以外は行わないでください。又、作業は十分注意して

① 光プラグ

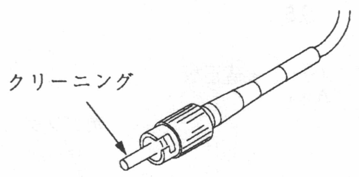

② OPTICAL コネクター

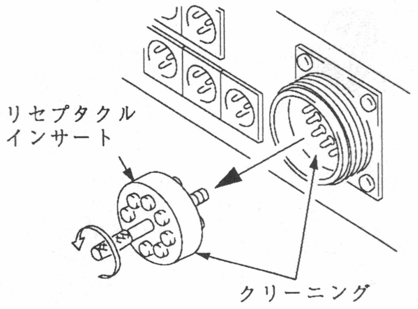

注：②の方法は光ファイバー先端部を傷付ける危険が高いので、必要なとき以外はクリーニングを行なわないで下さい。

③ 中間アダプター
FC66-PA10 (別売)

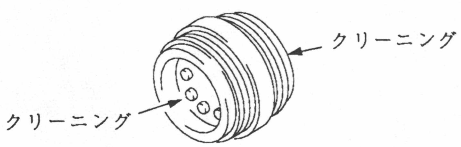

④ 光ファイバーケーブル
FC6-PA250/500 (別売)

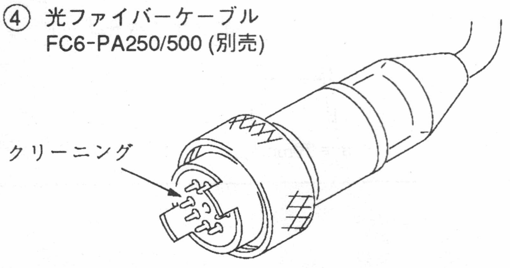

3-4. サービス上の注意事項

3-4-1. 光ファイバーコードの取り扱い上の注意事項

コネクターパネルのOPTICALコネクターから出ている6本の水色の線材は光ファイバーコードです。従ってコードを折ったり最少径が30 mm以下に曲げたりしないで下さい。
又、このファイバーコードとコネクターおよびプラグの接続には特殊治具を必要とするため、部品単体での交換は出来ません。ハーネス付6芯OPTICALコネクター (ソニー部品番号 : A-7602-076-A) を単位として交換して下さい。

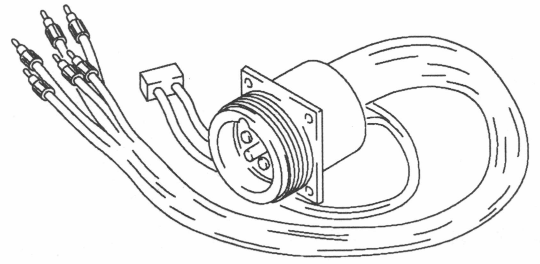

ハーネス付 6 芯OPTICALコネクター

3-4-2. 電源ユニットの注意事項

電源ユニット故障の場合はユニット毎交換して下さい。
万一、電源ユニット (スイッチングレギュレター) を修理する際は、下記のような注意が必要になります。

(1) 本機は高圧、大容量の電源を供給しているので感電に十分注意を要します。
(2) 電源スイッチを切っても、しばらくはコンデンサに電荷が残っているため感電の危険があります。電源を切った後も数分間は感電に注意して下さい。
(3) 電源単体を無負荷で動作させると電源が故障する恐れがあります。電源ユニット単位でのチェックは絶対に行わないで下さい。
(4) 動作中に異常が起きた電源が発振を停止した場合、再度電源スイッチを入れ直さない限り復帰しません。
再度入れ直す時は、1分間以上間をおいて下さい。

3-4-3.　チップ部品交換時の注意事項

コンデンサー

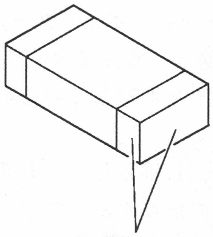

抵抗

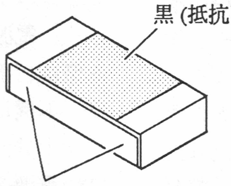

ダイオード、トランジスタ

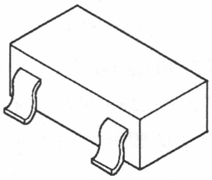

用意する工具:	20W程度の半田ゴテ（可能ならば、コテの温度が270±10℃にコントロールできる温度コントローラーを使用する。） 編組線(ソルダートール) 半田(0.6mm径のものが望ましい) ピンセット
半田付け条件：	コテ温度270±10℃ 端子1か所を2秒以内に半田付けすること。

手順

1. 抵抗又はコンデンサーを外す場合は、半田ゴテの先をチップ部品の上にのせて部品を加熱し、半田が溶けた状態で横にずらして外します。
   ダイオード又はトランジスターの場合は、チップ部品の片側に足が2本出ている方を同時に加熱し、半田が溶けたら部品を上に起こして足2本を外します。次にもう片方の足を外すようにします。
2. 外した後、ランド表面を平らにするために、編組線を使って半田を吸い取って下さい。
3. 取り外した部分のパターンはがれ、隣接半田付け部のダメージ、ブリッジなどがないことを目視にて確認します。
4. パターンにうすく予備半田します。
5. 新しいチップ部分をパターンにのせ両端を半田付けします。

取り外したチップ部品は再度使用しないこと。

詳しくは、チップ・マニュアル ソニー部品番号9-963-089-01を参照して下さい。

3-4-4. PROM IC

PROM ICにはオリジナル品名の末尾にそのプログラムの名称が記載されています。
又、バージョン変更された場合、この末尾の名称が変わります。
オリジナル品名のみは(プログラム化されていない）絶対に使用しないで下さい。
尚､各基板に使われているICは全てソケット化しています。

3-4-5. 補修用部品の注意事項

(1) 安全重要部品
回路図、分解図、電気部品表中、⚠ 印及び ▨ で囲まれた部品は安全性を維持するために重要な部品です。従って、これらの部品を交換するには必ず指定の部品と交換して下さい。

(2) 部品の共通化
ソニーから供給される部品はセットに実装されているものと異なることがあります。これは部品の共通化、改良等によるものです。分解図や電気部品表中には現時点での共通化された部品が記載されています。

(3) 部品在庫
分解図、電気部品表中、SP欄がSで示されている部品は常時在庫しています。
SP欄が"O"で示されている部品は交換頻度が低い部品であるので在庫しないことがあり、納期が長くなることがあります。

(4) コンデンサ、インダクタ、抵抗の単位
回路図、分解図、電気部品表中、特に明記したものを除き、下記の単位は省略されています。
コンデンサ ： μF
インダクタ ： μH
抵抗 ： Ω

SECTION 3
SERVICE INFORMATION

3-1. BOARD LAYOUT

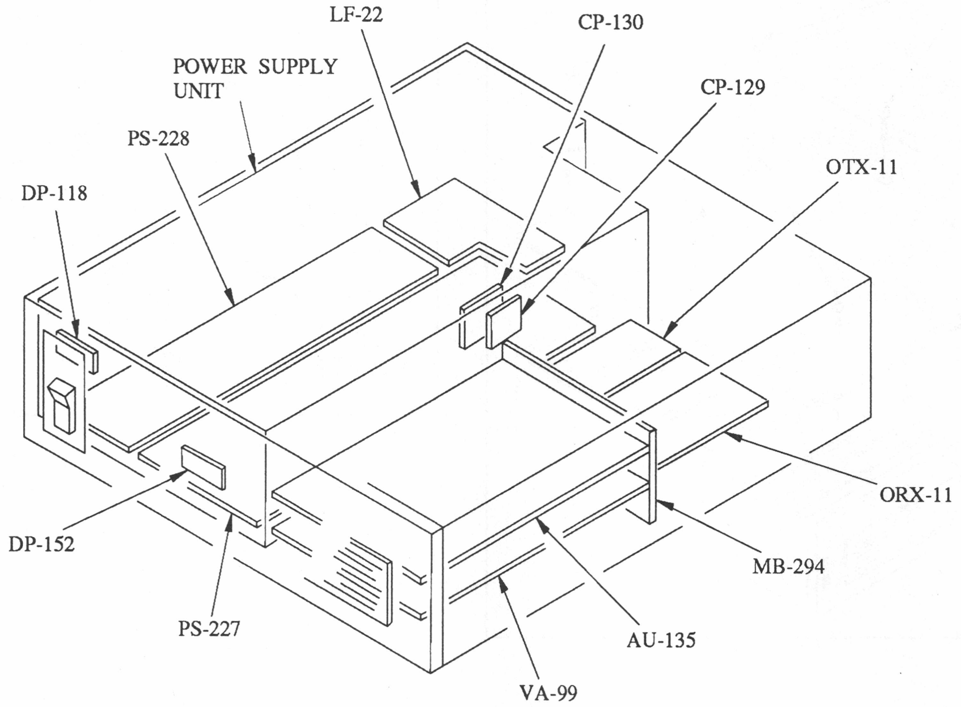
LF-22
CP-130
POWER SUPPLY UNIT
CP-129
PS-228
OTX-11
DP-118
ORX-11
DP-152
MB-294
PS-227
AU-135
VA-99

3-2. REPLACEMENT OF MAIN PARTS

3-2-1. Removal of Top Panel

Remove the six screws (+BVTT 3×5) and remove the top panel.

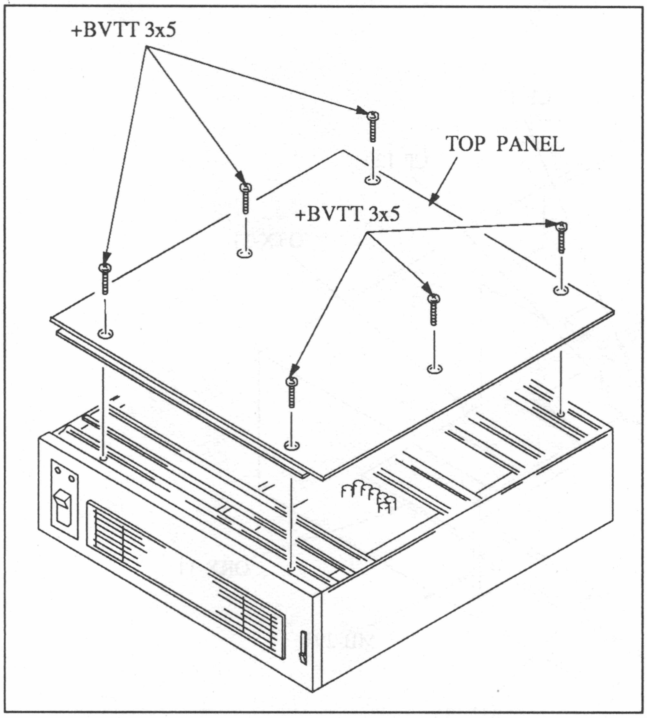
+BVTT 3x5
TOP PANEL
+BVTT 3x5

3-2-2. Removal of Power Supply Unit

Remove the four screws (+BVTT 3×6) and remove the power supply unit

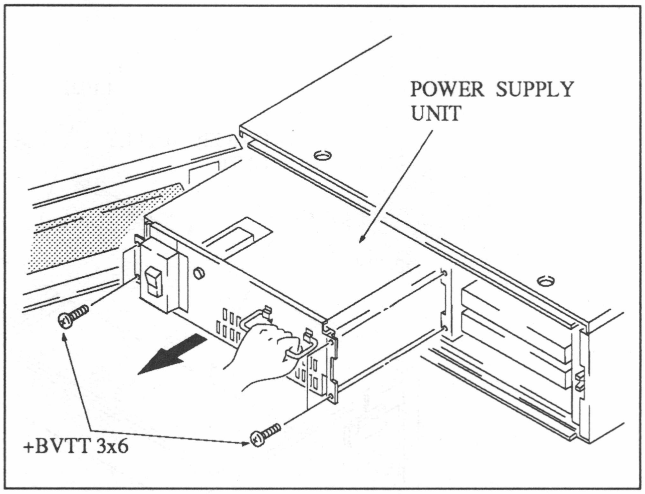
POWER SUPPLY UNIT
+BVTT 3x6

3-2-3. Removal of Connector Panel

(1) Remove the top panel.
(2) Remove the six screws (+BVTT 3×5) and disconnect the connectors as the illustration. The connector panel will be removed.

In removing the CCU connector and the OPTICAL connector, refer to Section 3-2-4 and 3-2-5.

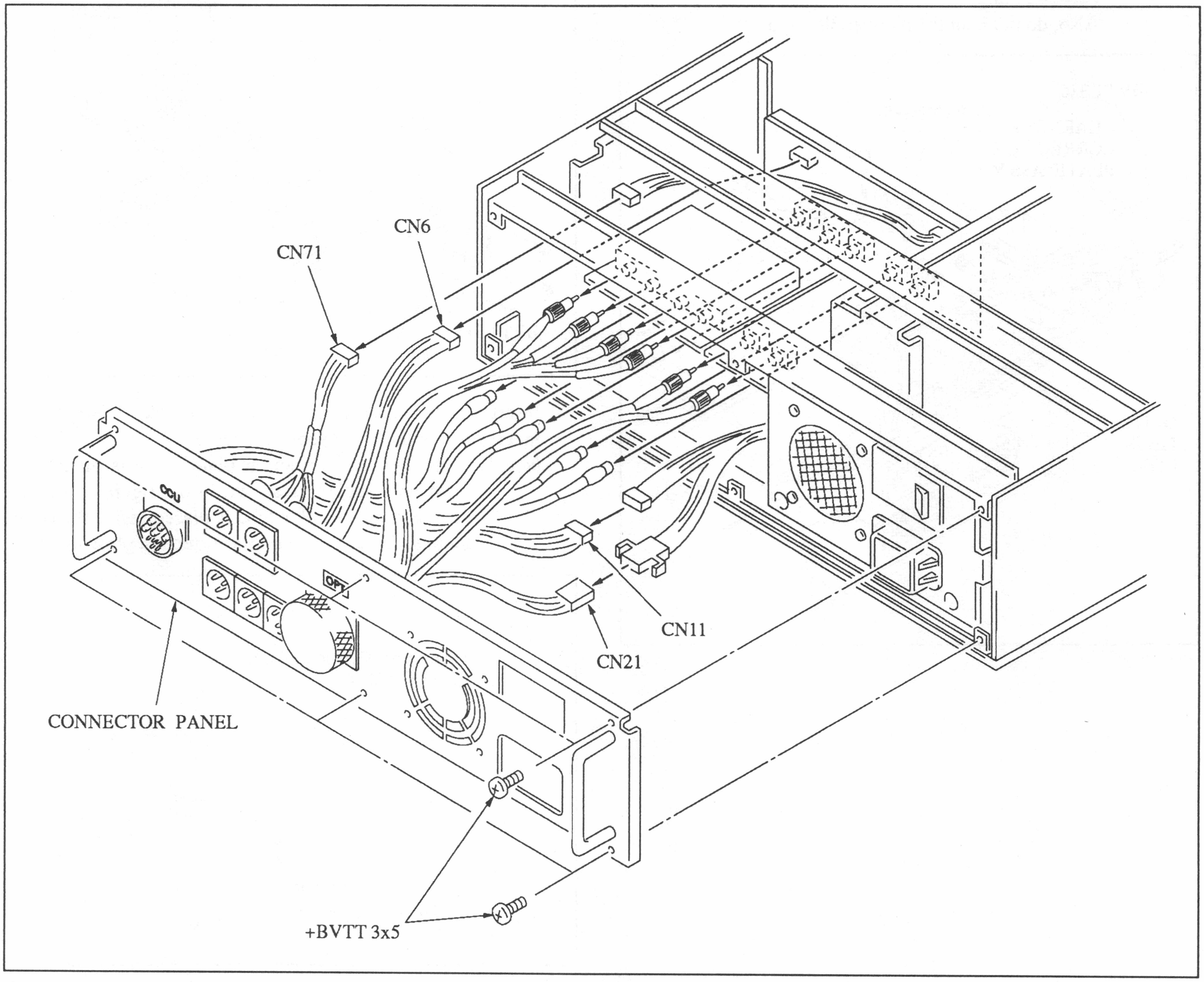
CN71
CN6
CCU
OPT
CN11
CN21
CONNECTOR PANEL
+BVTT 3x5

3-2-4. Replacement of CCU Connecter

(1) Remove the top panel.

(2) Remove the screws (+BVTT 3×5 (2 pcs.), +BVTT 3×6 (2 pcs.)) and then remove the harness correction plate Ass'y, the ORX-11 board, and the OTX-11 board.

Note: In removing the OTX and ORX boards, do not overstress the optical fiber cords and optical connector. Do not pull or pinch the optical fiber cords between things.
Also, do not bent them under 30 mmϕ.

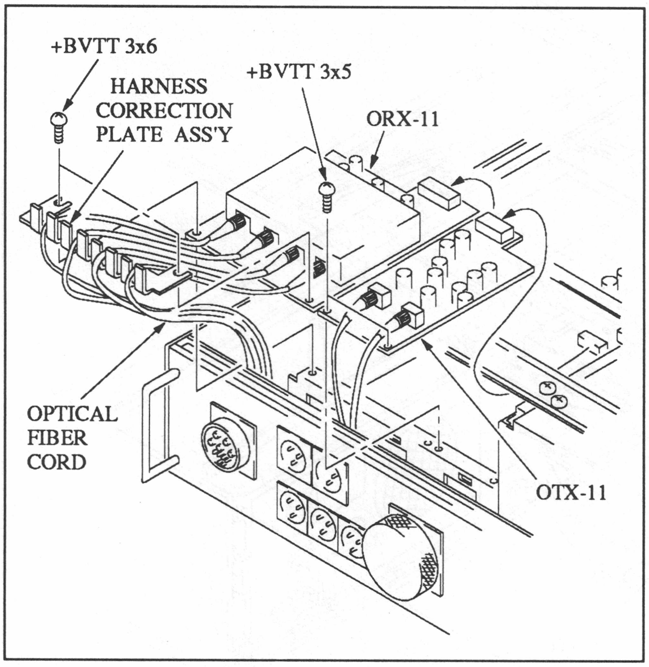
+BVTT 3x6
HARNESS CORRECTION PLATE ASS'Y
+BVTT 3x5
ORX-11
OPTICAL FIBER CORD
OTX-11

(3) Disconnect the connector CN11 and disconnect the five connectors CN101 to CN501 on the MB-294 board.

(4) Remove the four screws (+BVTT 3×5) and remove the CCU connector with harness connected.

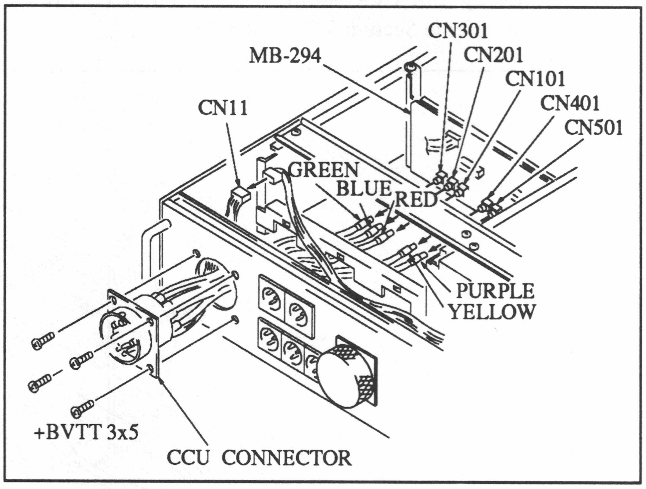
CN301
MB-294
CN201
CN101
CN11
CN401
CN501
GREEN
BLUE
RED
PURPLE
YELLOW
+BVTT 3x5
CCU CONNECTOR

(5) Insert a new CCU connector (Sony parts No. 1-946-217-11) in a reverse order of the above procedures.

Note1: If the harness correction plate Ass'y is installed, it must be installed as shown in the figure so that the back end of the color tube is placed inside the comb-tooth section of the harness correction plate Ass'y.

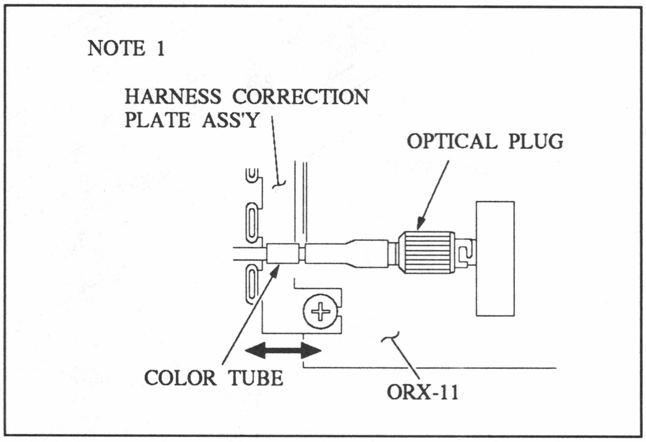
NOTE 1
HARNESS CORRECTION PLATE ASS'Y
OPTICAL PLUG
COLOR TUBE
ORX-11

3-2-5. Replacement of OPTICAL Connector

(1) Remove the top panel.
(2) Disconnect the optical plugs D101 to D401 on the ORX-11 board and D101 and D201 on the OTX-11 board.
(3) Disconnect the connector CN21.
(4) Open the dust cap. Remove the four screws (+B 3×6), and remove the OPTICAL connector with harness connected.

Note1: In removing the optical plugs, do not hold the optical fiber cords, but hold the optical plugs as the illustration.

Note2: In handling the optical fiber cords, do not pull them or pinch them between things. Also do not bent them under 30 mm ø.

(5) Remove the dust protection caps from the optical plugs. Insert a new OPTICAL connector (Sony part No. A-7602-076-A) through the hole in the connector panel from outside, then fix them in a reverse order of the above procedures.

Note3: In removing the dust protection caps, do not hold the optical fiber cords, but hold the optical plugs as the illustration.

Note4: In inserting the optical plugs, hold them on the heads as the illustration.

Note5: The harness correction plate Ass'y must be installed so that the back end of the color tube is placed inside the comb-tooth section of the harness ccorrection plate Ass'y when the optical plug is mounted.

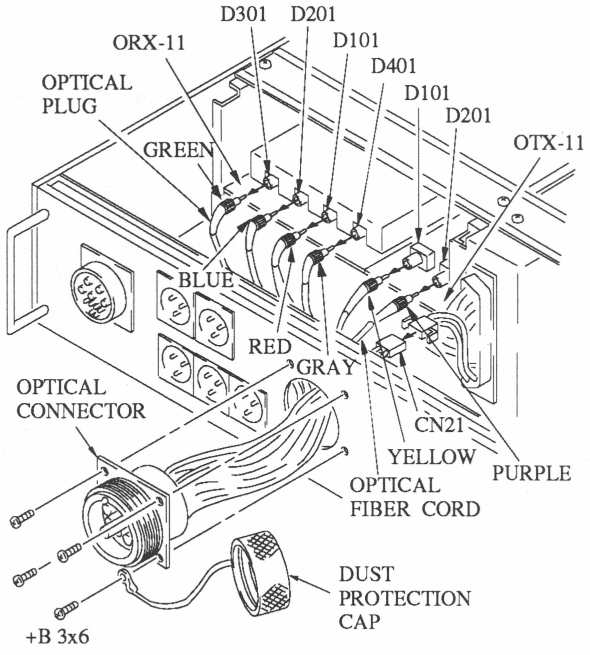
D301
D201
ORX-11
D101
D401
OPTICAL PLUG
D101
D201
OTX-11
GREEN
BLUE
RED
GRAY
OPTICAL CONNECTOR
CN21
YELLOW
PURPLE
OPTICAL FIBER CORD
DUST PROTECTION CAP
+B 3x6

NOTE 1

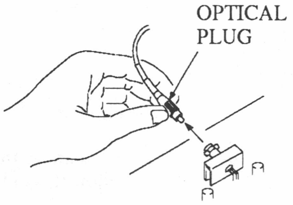
OPTICAL PLUG

NOTE 2

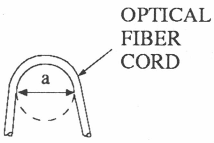
OPTICAL FIBER CORD
a

a = more than 30mm

NOTE 3

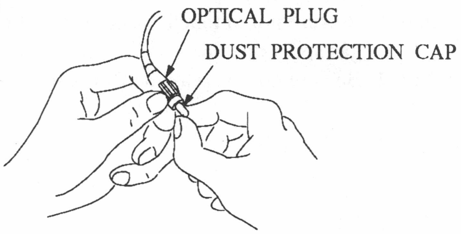
OPTICAL PLUG
DUST PROTECTION CAP

NOTE 4

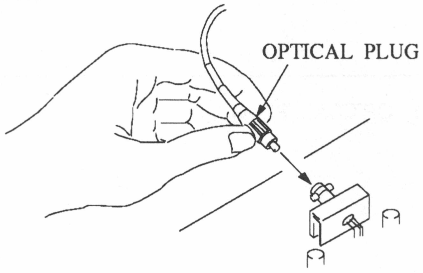
OPTICAL PLUG

NOTE 5

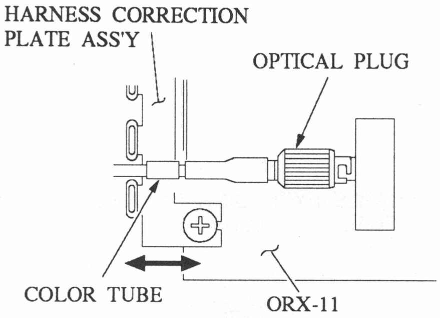
HARNESS CORRECTION PLATE ASS'Y
OPTICAL PLUG
COLOR TUBE
ORX-11

3-3. PERIODIC CHECK AND MAINTENANCE

3-3-1. Optical Connector Cleaning

The signal loss may be caused by dirt or dust on the optical connector, the optical fiber cable, or the cable extension connector. To prevent this, clean them periodically as follows referring to the servicing precautions.

(1) Cleaning by high tension gas spray

Use the clean high tension gas spray (filtered nitrogen gas etc.) for periodical cleaning to remove slight stains.

- Slant the gas spray slightly upward, and press the bottom to check that no fluid or oil sprays out.
- Spray onto the parts which are indicated in the illustrations below, and remove the dust.
  (Clean the optical connector without removing the receptacle insert. -Illust. ②)
  Note1: Be sure not to touch the connector terminal with the gas spray nozzle.
  Note2: Be sure not to spray the fluid during the cleaning.

(2) Cleaning by ethyl alcohol.

Use ethyl alcohol for stains which cannot be removed by the gas spray.

- Saturate a clean cotton-tipped applicator with ethyl alcohol, and wipe lightly the parts indicated in the illustrations below. (Clean the optical connector without removing the receptacle insert. -Illust. ②)
- After wiping, spray the gas lightly and blow away the alcohol.
  Note: Pay special attention not to damage the tips of the optical fibers or the cable extension connector, or not to leave a piece of cotton attached on them.

(3) If the stains on the optical connector cannot be removed by the two methods mentioned above, remove the receptacle insert as the illustration ②, and clean by the high tension gas spray or ethyl alcohol.
After cleaning, insert the receptacle insert making sure that its holes exactly fit the tips of the optical fiber, and fix it tightening the center screw. In doing this, a miss-touch between the optical fiber and the receptacle insert may damage the tips of the optical fiber connector. Do not do this unless it is absolutely necessary.

① OPTICAL PLUG

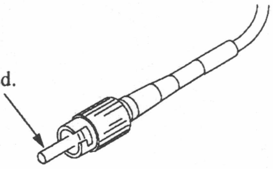

② OPTICAL CONNECTOR

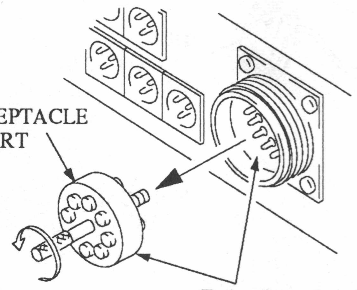

Note: Cleaning as the illustration ② may damage the tips of the optical fiber. Do not allow this unless it is absolutely necessary.

③ CABLE EXTENSION CONNECTOR
FC6E-PA10 (optional)

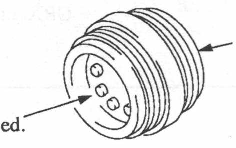

④ OPTIONAL FIBER CABLE
FC6-PA250/500 (optional)

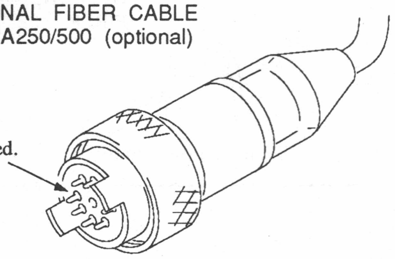

3-4. SERVICING PRECAUTIONS

3-4-1. Optical Fiber Cord Handling

The six sky-blue cords from the optical connectors of the connector panel are the optical fiber cords. Do not fold or bend them under 30 mm ø.

A special jig is required to connect the optical fiber cords with a connector and a plug, so it is impossible to replace only a part. If one or more of the six cords is disconnected, the 6-fiber optical connector with harness (Sony part No. A-7602-076-A) must be replaced as a unit.

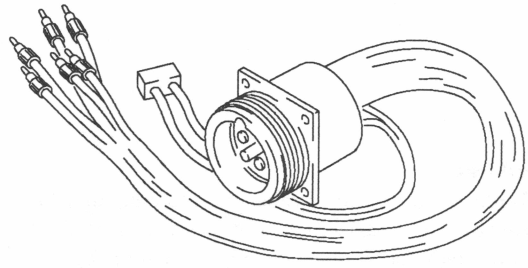

6-fiber OPTICAL connector with harness

3-4-2. Power Supply Unit

When the power supply unit (switching requlator) goes out of order, replace the whole unit. If repair is required, take the following precautions.

(1) The power supply unit supplies considerable power of high voltage, so take precautions to prevent electric shock.

(2) Since the capacitor remains charged for a while after the power is switched off, take precautions to prevent electric shock for a few minutes, even after disconnecting the power supply unit.

(3) Running the power supply unit under no load may cause power source trouble, so never check the power supply unit independently.

(4) In case of a trouble during the operation, the power supply unit stops oscillating and does not refunction until the power switch is turned off, then to on again. Wait 1 minute or longer before setting the power switch to on again.

3-4-3. Precaution on Replacement of Chip Parts

Capacitor

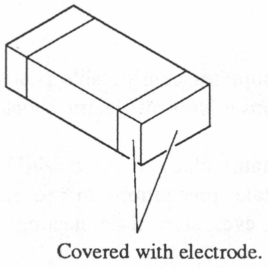

Resistor

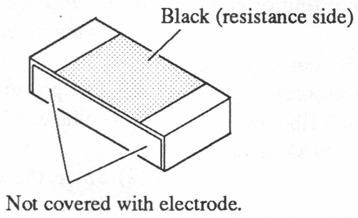

Diode and Transistor

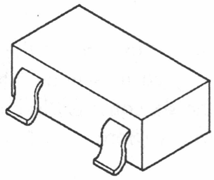

Tools required:

Soldering iron of approx. 20W
(Use a temperature controller, if possible, which can control the iron temperature to 270±10℃)
Braided wire (SOLDER TAUL)
Solder (A solder of 0.6mm in diameter is recommended.)
Tweezers

Soldering conditions:

Iron temperature of 270±10℃
A connector should be soldered within 2 seconds.

Do not reuse parts which have been removed.

For details, refer to CHIP COMPONENTS MANUAL, Sony's parts No. 9-972-289-91 prepared by Sony Corporation.

Procedures

(1) To remove a resistor or capacitor, place the tip of a soldering iron on chip parts to heat the parts, and then move it horizontally for removal while being desoldered.
For removal of a diode or transistor, heat the one side, with two pins, of chip parts at the same time, set the parts up when desoldered, and remove the two pins. And then, remove the pin on another side.

(2) Absorb solder by using a braided wire to smooth the land surface of board after removal.

(3) Confirm by visual check that no trace is come off, no adjacent parts is damaged or no bridging occur.

(4) Perform a thin pretinning on the trace.

(5) Place new chip parts on the trace to solder its both sides.

3-4-4. PROM IC

Each PROM IC on the PC board has a suffix to its original designation. This suffix may change according to improvement of IC. Never use an IC having no suffix to its original designation, because its memory has not been programmed. Each PROM IC is mounted to the PC board via socket.

3-4-5. Precaution of Replacement Parts

(1) Safety Related ComponentsWarning
Components identified by shading marked with ⚠ on the schematic diagrams, exploded views and electrical spare parts list are critical to safe operation. Replace these components with Sony parts whose parts numbers appear as shown in this manual or in service bulletins and service manual supplements published by Sony.

(2) Standardization of Parts
Replace parts that are supplied from Sony Parts Center can sometimes have different shape and external appearance than what are actually used in equipment. This is due to "accommodating the improved parts and/or engineering changes" or "standardization of genuine parts." This manual's exploded view and electrical spare parts lists are indicating the parts numbers of "the standardized genuine parts at present."

(3) Stocked Parts
The parts marked with "S" in the SP column of the exploded views and electrical spare parts list are normally required for routine service work. Orders for parts marked with "O" will be proceed, but allow for additional delivery time.

(4) Units of Capacitors, Inductors, and Resistors
The following units are omitted in the schematic diagrams, exploded views, and electrical part lists unless otherwise specified;
Capacitor : μF
Inductor : μH
Resistor : Ω

第4章
調整要項

4-1. 準備

4-1-1. 使用機器

J-6029-140-A	パターンボックス PTB-500
PTB-100も使用できます。 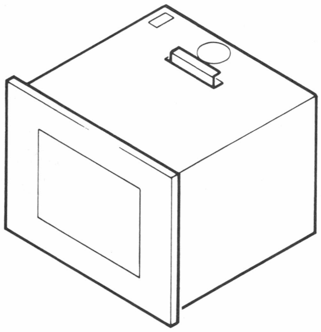	

J-6026-110-A	マルチバーストチャート
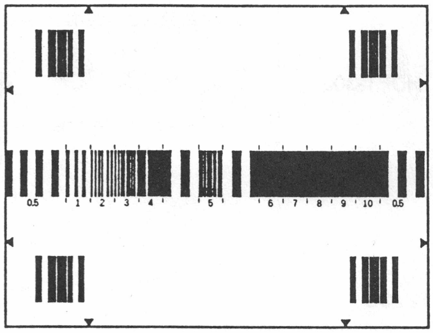 0.5 1 2 3 4 5 6 7 8 9 10 0.5	

A-7515-188-A	延長基板 EX-252
付属品 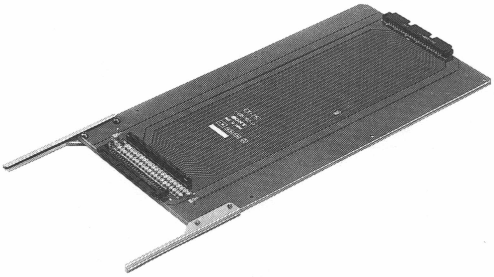	

- HDVSカメラシステム
  - HDC-300
  - HDCS-300
  - HDCO-300
  - HDFT-300
- HDVSモニタ
  - HDM-1220 (または相当品)
  - HDM-90 (または相当品)

測定器
- デジタル電圧計
- オシロスコープ (テクトロニクス社2465または相当品)
- 周波数カウンタ
- HDVS波形モニタ (テクトロニクス社1730HDまたは相当品)
- オーディオアナライザ(シバソク社AH87Bまたは相当品)

4-1-2. 接続

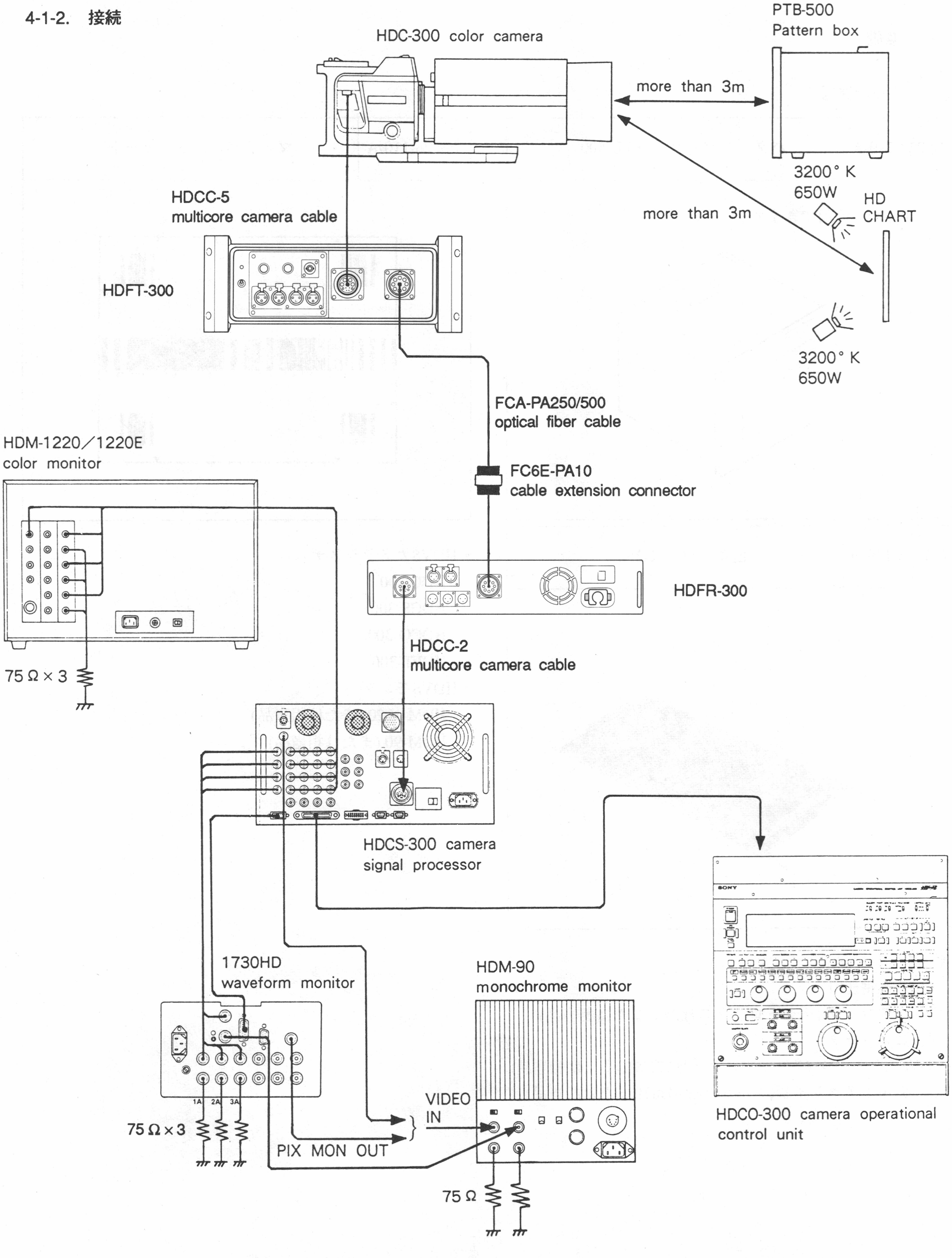

HDC-300 color camera
PTB-500
Pattern box
more than 3m
more than 3m
3200° K
650W
HD
CHART
3200° K
650W
HDCC-5
multicore camera cable
HDFT-300
FCA-PA250/500
optical fiber cable
FC6E-PA10
cable extension connector
HDM-1220／1220E
color monitor
75 Ω × 3
HDFR-300
HDCC-2
multicore camera cable
HDCS-300 camera
signal processor
SONY
1730HD
waveform monitor
1A
2A
3A
75 Ω × 3
HDM-90
monochrome monitor
VIDEO
IN
PIX MON OUT
75 Ω
HDCO-300 camera operational
control unit

4-1-3.　注意事項

- 本機は電源部分に非常な高圧を生じるため、調整を行なう時には特に注意して下さい。

- 調整に使用するHDVSカメラシステムは、完全に調整されていることが必要です。

- 接続を行なう場合や基板を延長する場合等は、必ず電源をOFFしてから行なって下さい。

- HDVSカメラシステム各機器の操作及び初期設定は、それぞれの操作マニュアルに従って行なって下さい。

- 調整を行なう前に、本機を含むHDVSカメラシステムの電源をONにして、約30分間ウォーミングアップを行なって下さい。

- 特に指示が無い限り、HDFR-300とHDFT-300との接続には、ケーブル延長コネクター (FC6E-PA10) を用いて250 mのOPTファイバーケーブル (FC6-PA250) を2本使用します。尚、250 mのOPTファイバーケーブルが無い場合には、500 mのOPTファイバーケーブル (FC6-PA500) が使用できます。

- OTX-11基板のボリュームのセッティング
  工場出荷時には、下記のようになっていますので調整しないで下さい。

⊘ RV101	↺ 反時計方向一杯
⊘ RV201	
⊘ RV102	↻ 時計方向一杯
⊘ RV202	

4-2.　調整項目

4-2-1.　電源調整 (PS-228基板)
4-2-2.　+9 V調整 (VA-99基板)
4-2-3.　SYNC CLAMP LEVEL調整 (VA-99調整)
4-2-4.　+9 V調整 (OTX-11基板)
4-2-5.　+9 V調整 (ORX-11基板)
4-2-6.　OPT G/B/R周波数特性調整 (ORX-11基板)
4-2-7.　AUDIO周波数特性調整 (ORX-11基板)
4-2-8.　G/B/R信号レベル調整 (VA-99基板)
4-2-9.　G/B/R周波数特性調整 (VA-99基板)
4-2-10.　OPT LEVEL ALARM G/B/Rランプ調整 (VA-99基板)
4-2-11.　+20 V/+5 V (A)/+5 V (D) 調整 (AU-135基板)
4-2-12.　PULSE WIDTH調整 (AU-135基板)
4-2-13.　AUDIO LEVEL調整 (AU-135基板)
4-2-14.　MSB調整 (AU-135基板)

4-2-1. 電源調整 (PS-228基板)

注意事項: 危険が伴いますので、ふだんはこの調整を行なわないで下さい。どうしても調整が必要な場合は、高電圧に細心の注意を払い絶対に感電しないように行なって下さい。

測定器: デジタル電圧計

準備: 電源をOFFにした状態で天板を取りはずし、電源ユニットを引き出します。そして電源ユニットの天板を取りはずし、再び電源ユニットをセットし、電源をONします。また、調整終了後は、電源をOFFにして注意しながら電源ユニットの天板をもとに戻して下さい。尚、電源ユニットの天板着脱時は必ず電源コードをはずして下さい。

調整手順:

測定点 /PS-228基板	調整箇所 /PS-228基板	規格
TP1 (GND: E1)	⊘RV202	20.75±0.02 V
TP2 (GND: E1)	⊘RV203	9.75±0.02 V
TP3 (GND: E1)	⊘RV201	5.75±0.02 V

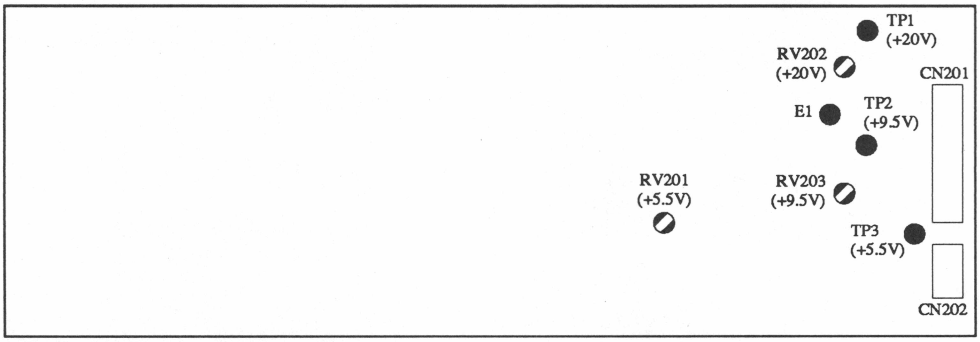
TP1
(+20V)
RV202
(+20V)
CN201
E1
TP2
(+9.5V)
RV201
(+5.5V)
RV203
(+9.5V)
TP3
(+5.5V)
CN202

PS-228 BOARD (COMPONENT SIDE)

4-2-2. +9 V 調整 (VA-99基板)

測定器: デジタル電圧計

基板延長: VA-99基板

調整手順:

測定点/ VA-99基板	調整箇所/ VA-99基板	規格
TP1 (GND: E1)	⊘RV1	9.00±0.03 V
TP3 (GND: E2)	⊘RV2	9.00±0.03 V

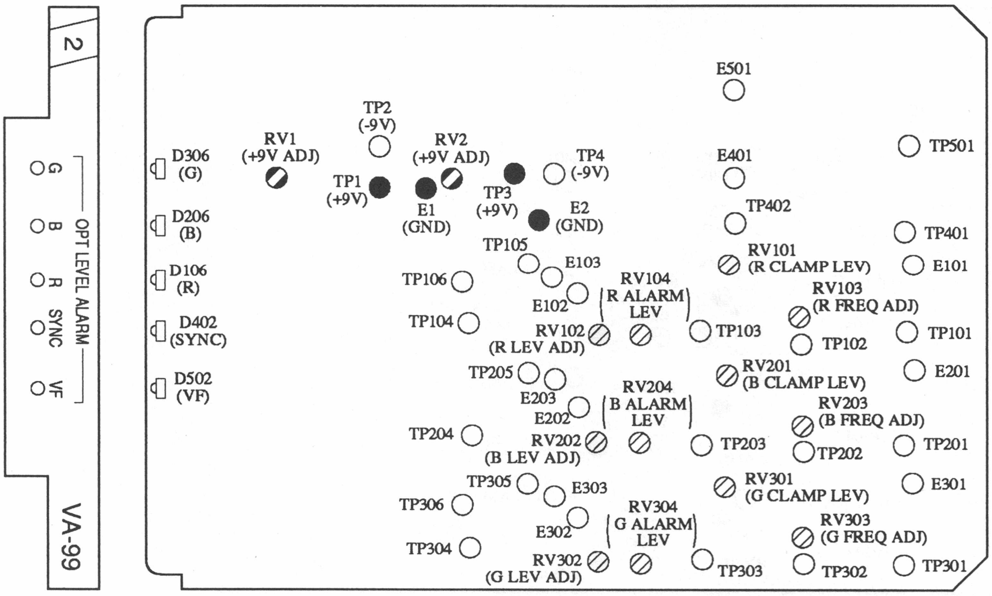
2
G
B
R
SYNC
VF
OPT LEVEL ALARM
VA-99
D306 (G)
D206 (B)
D106 (R)
D402 (SYNC)
D502 (VF)
RV1 (+9V ADJ)
TP2 (-9V)
TP1 (+9V)
E1 (GND)
RV2 (+9V ADJ)
TP3 (+9V)
TP4 (-9V)
E2 (GND)
E501
E401
TP501
TP402
TP401
TP105
E103
TP106
E102
RV104 R ALARM LEV
RV101 (R CLAMP LEV)
E101
RV103 (R FREQ ADJ)
TP104
RV102 (R LEV ADJ)
TP103
TP102
TP101
TP205
RV201 (B CLAMP LEV)
E201
E203
E202
RV204 B ALARM LEV
RV203 (B FREQ ADJ)
TP204
RV202 (B LEV ADJ)
TP203
TP202
TP201
TP305
E303
RV301 (G CLAMP LEV)
E301
TP306
E302
RV304 G ALARM LEV
RV303 (G FREQ ADJ)
TP304
RV302 (G LEV ADJ)
TP303
TP302
TP301

(PANEL SIDE) VA-99 BOARD (COMPONENT SIDE)

4-2-3. SYNC CLAMP LEVEL調整 (VA-99基板)

測定器: オシロスコープ

基板延長: VA-99基板

準備:

- HDCO-300のTEST CHUスイッチを押して、テスト波形を出力させます。

調整手順:

1. TP303/VA-99基板のSYNC CLAMP LEVEL "A" が規格になるように ⊘RV301/VA-99基板を調整します。
2. 同様に、B-ch, R-chについても同じ方法で行ないます。

	測定点/ VA-99基板	調整箇所/ VA-99基板	規格
G-ch	TP303 (GND: E302)	⊘RV301	A=75±5 mV
B-ch	TP203 (GND: E202)	⊘RV201	
R-ch	TP103 (GND: E102)	⊘RV101	

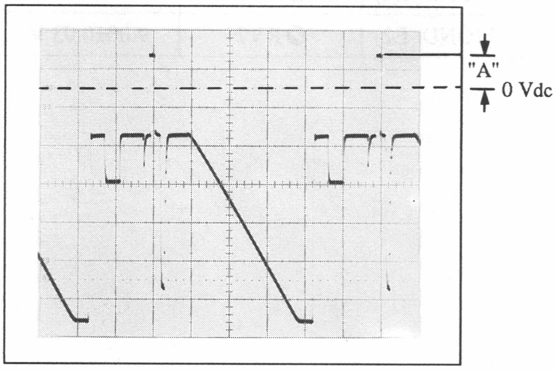

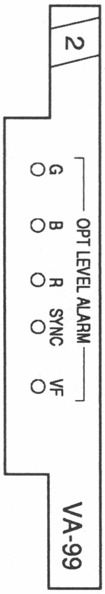
2
G
B
R
SYNC
VF
OPT LEVEL ALARM
VA-99

(PANEL SIDE)

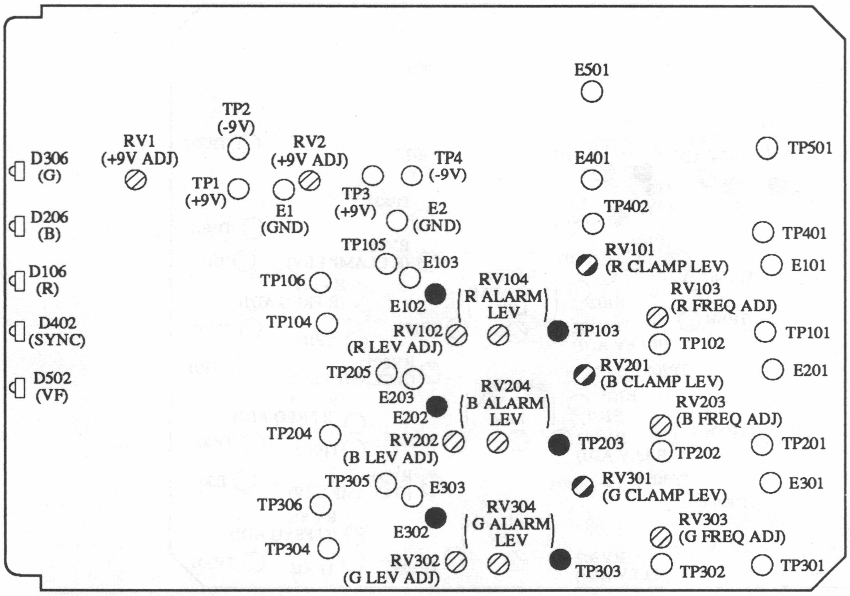
E501
TP2 (-9V)
RV1 (+9V ADJ)
RV2 (+9V ADJ)
TP4 (-9V)
E401
TP501
D306 (G)
TP1 (+9V)
E1 (GND)
TP3 (+9V)
E2 (GND)
TP402
D206 (B)
TP401
TP105
E103
RV101 (R CLAMP LEV)
E101
D106 (R)
TP106
RV104 R ALARM LEV
E102
RV103 (R FREQ ADJ)
TP104
RV102 (R LEV ADJ)
TP103
TP102
TP101
D402 (SYNC)
TP205
RV201 (B CLAMP LEV)
E201
D502 (VF)
E203
RV204 B ALARM LEV
E202
RV203 (B FREQ ADJ)
TP204
RV202 (B LEV ADJ)
TP203
TP202
TP201
TP305
E303
RV301 (G CLAMP LEV)
E301
TP306
RV304 G ALARM LEV
E302
RV303 (G FREQ ADJ)
TP304
RV302 (G LEV ADJ)
TP303
TP302
TP301

VA-99 BOARD (COMPONENT SIDE)

4-2-4. +9 V調整 (OTX-11基板)

測定器:　デジタル電圧計

基板延長:　OTX-11基板

測定点:　TP1 (GND: E1)/OTX-11基板

調整箇所:　⊘ RV1/OTX-11基板

規格:　9.00±0.03 V

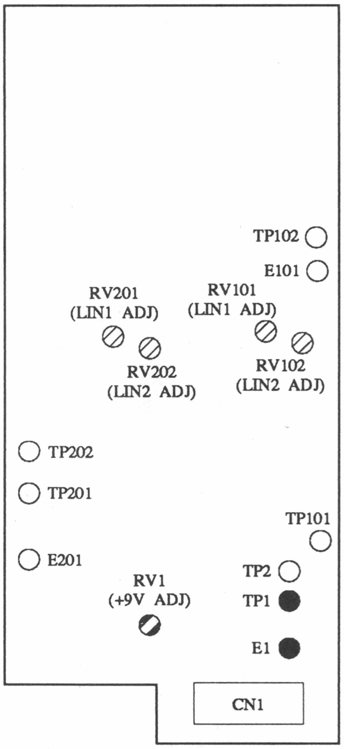
TP102
E101
RV201
(LIN1 ADJ)
RV101
(LIN1 ADJ)
RV202
(LIN2 ADJ)
RV102
(LIN2 ADJ)
TP202
TP201
TP101
E201
RV1
(+9V ADJ)
TP2
TP1
E1
CN1

OTX-11 BOARD (COMPONENT SIDE)

4-2-5. +9 V調整 (ORX-11基板)

測定器:　デジタル電圧計

基板延長:　ORX-11基板

測定点:　TP1 (GND: E1)/ORX-11基板

調整箇所:　⊘RV1/ORX-11基板

規格:　9.00±0.03 V

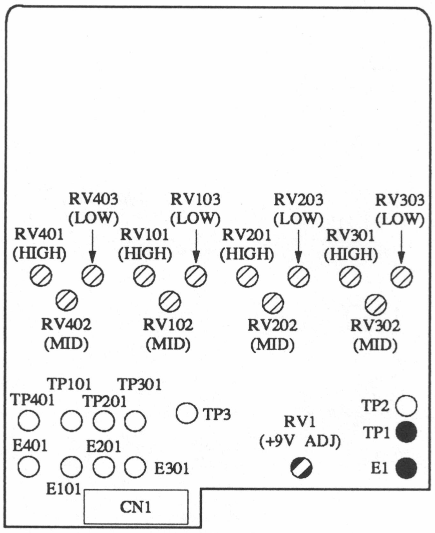
RV403
(LOW)
RV103
(LOW)
RV203
(LOW)
RV303
(LOW)
RV401
(HIGH)
RV101
(HIGH)
RV201
(HIGH)
RV301
(HIGH)
RV402
(MID)
RV102
(MID)
RV202
(MID)
RV302
(MID)
TP101
TP301
TP401
TP201
TP3
TP2
TP1
RV1
(+9V ADJ)
E401
E201
E301
E101
E1
CN1

ORX-11 BOARD (COMPONENT SIDE)

4-2-6. OPT G/B/R周波数特性調整 (ORX-11基板)

測定器: オシロスコープ

基板延長: OTX-10基板/HDFT-300

被写体: バーストチャート

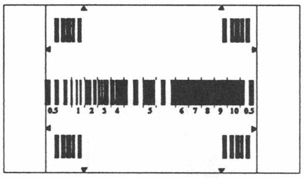
0.5
1
2
3
4
5
6
7
8
9
10
0.5

モニタ画面

調整手順:
基準点の波形に対して、測定点の全体の波形が同等になるように下記の調整箇所を調整します。

	基準点/ HDFT-300 OTX-10基板	測定点/ ORX-11基板	調整箇所/ ORX-11基板
G-ch	TP301 (GND: TP302)	TP301 (GND: E301)	L: ⊘ RV302 M: ⊘ RV302 H: ⊘ RV301
B-ch	TP201 (GND: TP202)	TP201 (GND: E201)	L: ⊘ RV203 M: ⊘ RV202 H: ⊘ RV201
R-ch	TP101 (GND: TP102)	TP101 (GND: E101)	L: ⊘ RV103 M: ⊘ RV102 H: ⊘ RV101

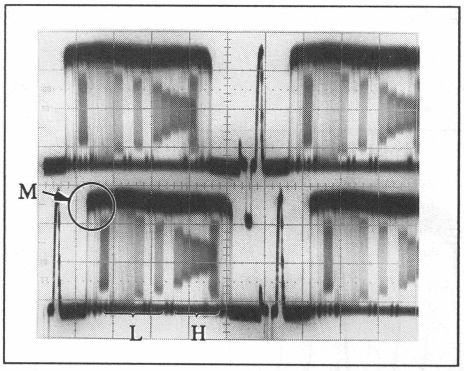

基準波形

測定波形

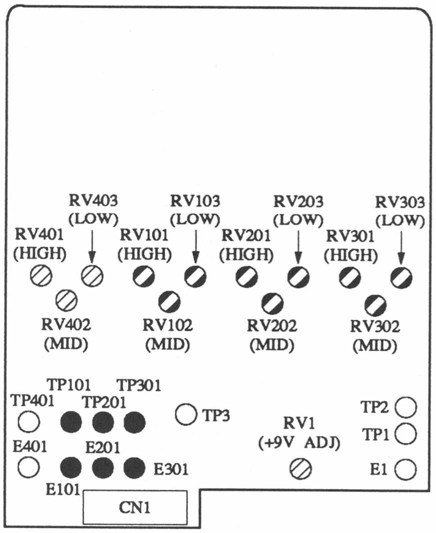
RV403 (LOW)
RV103 (LOW)
RV203 (LOW)
RV303 (LOW)
RV401 (HIGH)
RV101 (HIGH)
RV201 (HIGH)
RV301 (HIGH)
RV402 (MID)
RV102 (MID)
RV202 (MID)
RV302 (MID)
TP101
TP301
TP401
TP201
TP3
RV1 (+9V ADJ)
TP2
TP1
E401
E201
E301
E101
E1
CN1

ORX-11 BOARD (COMPONENT SIDE)

4-2-7. AUDIO周波数特性調整 (ORX-11基板)

注意事項: 下記の写真は、250 mのOPTファイバーケーブル (FC6-PA250) を使用して測定したものです。500 mのものを使用した時には、信号レベルが減少します。けれどもこの調整には影響ありません。

測定点: TP-401(GND: E401)/ORX-11基板

調整手順:

1. ⊘RV403, ⊘RV402/ORX-11基板のボリュームをメカニカルセンターにします。
2. "A"部の波形がフラットになるように ⊘RV401/ORX-11基板を調整します。

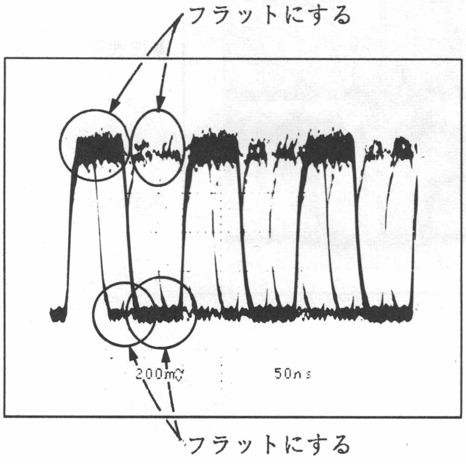

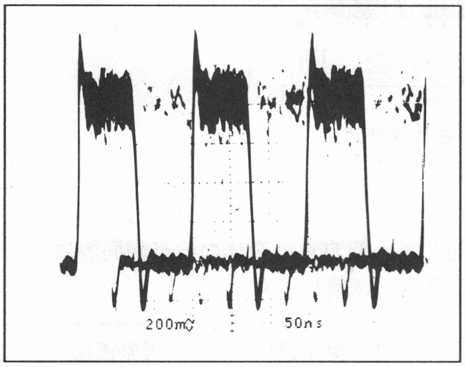

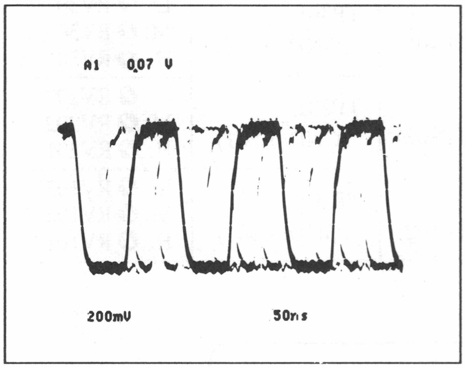

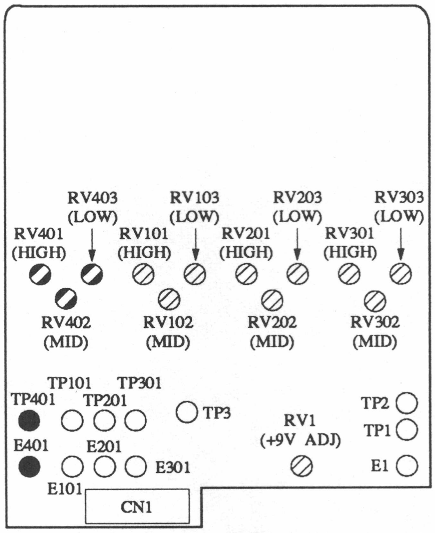
RV403 (LOW)
RV103 (LOW)
RV203 (LOW)
RV303 (LOW)
RV401 (HIGH)
RV101 (HIGH)
RV201 (HIGH)
RV301 (HIGH)
RV402 (MID)
RV102 (MID)
RV202 (MID)
RV302 (MID)
TP101
TP301
TP401
TP201
TP3
RV1 (+9V ADJ)
TP2
TP1
E401
E201
E301
E101
E1
CN1

ORX-11 BOARD (COMPONENT SIDE)

4-2-8. G/B/R信号レベル調整 (VA-99基板)

測定器: オシロスコープ

基板延長: VA-99基板
OTX-10基板/HDFT-300

準備:

- HDCO-300のTEST CHUスイッチを押して、テスト波形を出力させます。

調整手順:

1. TP-301/OTX-10基板のレベル "A" に対して、TP304/VA-99基板の信号レベル "B" が2倍になるように ⊘ RV302/VA-99基板を調整します。
2. 同様に、B-ch, R-chについても同じ方法で行ないます。

	基準点/ HDFT-300 OTX-10基板	測定点/ VA-99基板	調整箇所/ VA-99基板
G-ch	TP301 (GND: TP302)	TP304 (GND: E302)	⊘ RV302
B-ch	TP201 (GND: TP202)	TP204 (GND: E202)	⊘ RV202
R-ch	TP101 (GND: TP102)	TP104 (GND: E102)	⊘ RV102

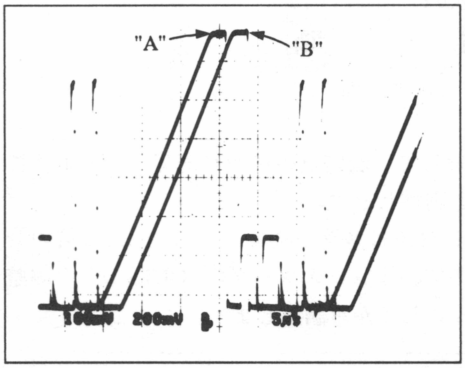

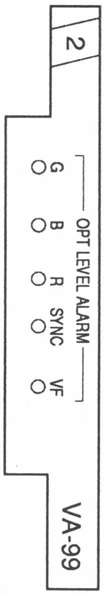
2
G
B
R
SYNC
VF
OPT LEVEL ALARM
VA-99

(PANEL SIDE)

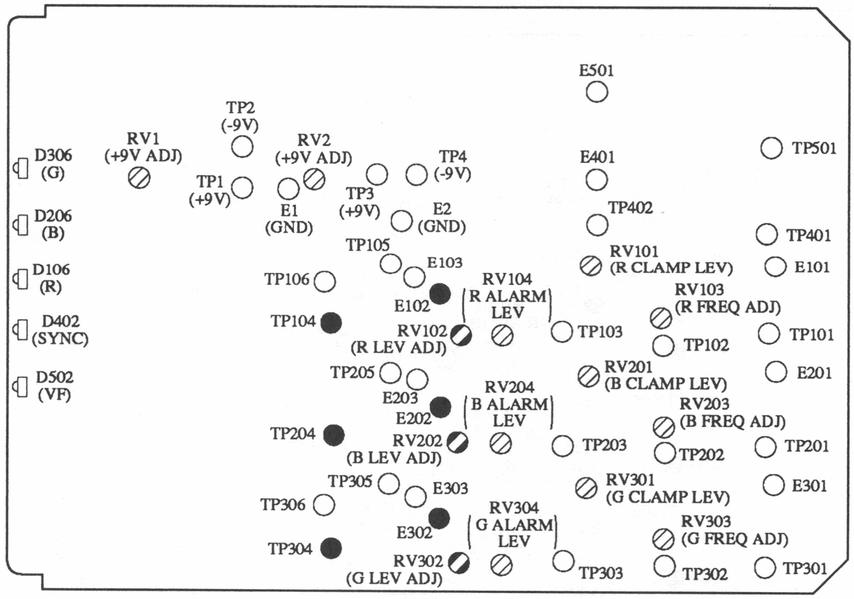
E501
TP2 (-9V)
RV1 (+9V ADJ)
RV2 (+9V ADJ)
TP4 (-9V)
E401
TP501
D306 (G)
TP1 (+9V)
TP3 (+9V)
E1 (GND)
E2 (GND)
TP402
D206 (B)
TP401
TP105
E103
RV101 (R CLAMP LEV)
E101
D106 (R)
TP106
RV104 R ALARM LEV
RV103 (R FREQ ADJ)
E102
TP104
RV102 (R LEV ADJ)
TP103
TP102
TP101
D402 (SYNC)
TP205
RV201 (B CLAMP LEV)
E201
D502 (VF)
RV204 B ALARM LEV
E203
E202
RV203 (B FREQ ADJ)
TP204
RV202 (B LEV ADJ)
TP203
TP202
TP201
TP305
E303
RV301 (G CLAMP LEV)
E301
TP306
RV304 G ALARM LEV
E302
RV303 (G FREQ ADJ)
TP304
RV302 (G LEV ADJ)
TP303
TP302
TP301

VA-99 BOARD (COMPONENT SIDE)

4-2-9. G/B/R周波数特性調整 (VA-99基板)

測定器: オシロスコープ

基板延長: VA-99基板
OTX-10基板/HDFT-300

被写体: バーストチャート

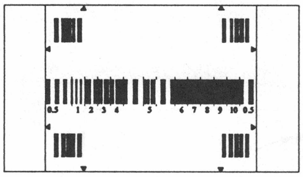
0.5 1 2 3 4 5 6 7 8 9 10 0.5

モニタ画面

調整手順:

基準点の波形に対して、測定点の波形が同等になるように下記の調整箇所を調整します。

但し、測定点のレベルは基準点のレベルに対して2倍のレベルがありますので、オシロスコープのVOLTS/DIVを調整して、同じレベルにしてから調整します。

	基準点/ HDFT-300 OTX-10基板	測定点/ VA-99基板	調整箇所/ VA-99基板
G-ch	TP301 (GND: TP302)	TP304 (GND: E303)	⊘ RV303
B-ch	TP201 (GND: TP202)	TP204 (GND: E203)	⊘ RV203
R-ch	TP101 (GND: TP102)	TP104 (GND: E103)	⊘ RV103

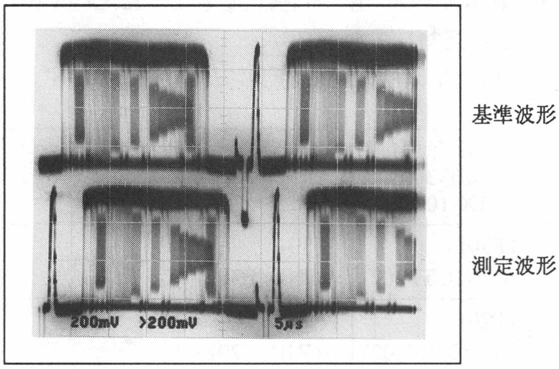

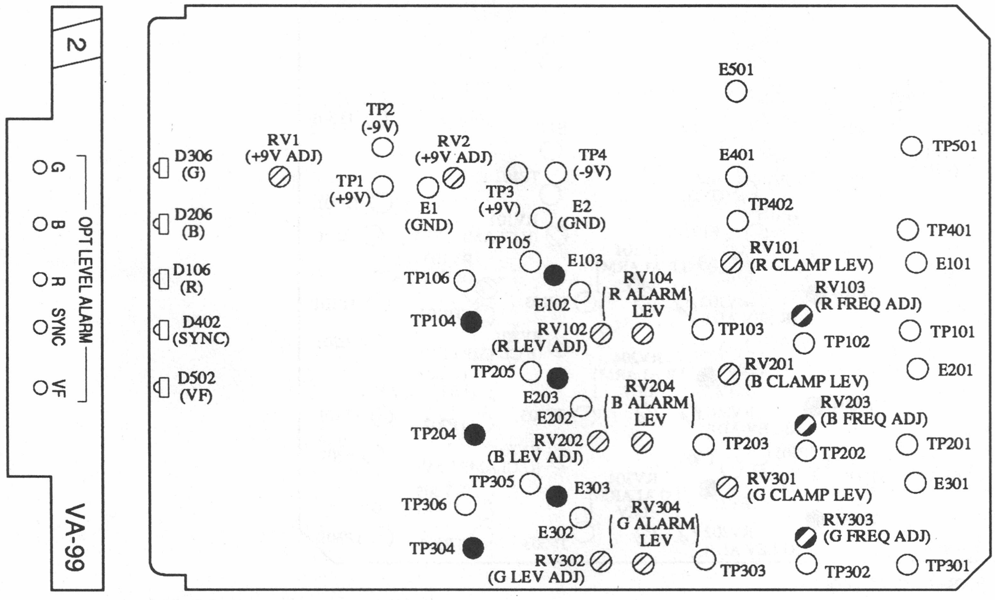
2
G
B
R
SYNC
VF
OPT LEVEL ALARM
VA-99
E501
TP2 (-9V)
RV1 (+9V ADJ)
RV2 (+9V ADJ)
TP4 (-9V)
E401
TP501
TP1 (+9V)
E1 (GND)
TP3 (+9V)
E2 (GND)
TP402
TP401
D306 (G)
D206 (B)
D106 (R)
D402 (SYNC)
D502 (VF)
TP105
E103
RV101 (R CLAMP LEV)
E101
TP106
RV104 (R ALARM LEV)
RV103 (R FREQ ADJ)
E102
TP104
RV102 (R LEV ADJ)
TP103
TP102
TP101
TP205
RV201 (B CLAMP LEV)
E201
RV204 (B ALARM LEV)
E203
RV203 (B FREQ ADJ)
E202
TP204
RV202 (B LEV ADJ)
TP203
TP202
TP201
TP305
E303
RV301 (G CLAMP LEV)
E301
TP306
RV304 (G ALARM LEV)
E302
RV303 (G FREQ ADJ)
TP304
RV302 (G LEV ADJ)
TP303
TP302
TP301

(PANEL SIDE) VA-99 BOARD (COMPONENT SIDE)

4-2-10. OPT LEVEL ALARM G/B/Rランプ調整 (VA-99基板)

測定器: オシロスコープ

基板延長: VA-99基板
ORX-11基板

準備:

- HDCO-300のTEST CHUスイッチを押して、テスト波形を出力させます。

調整手順:

1. オシロスコープを見ながら、TP301/VA-99基板のレベル "A" が200±10 mVp-pになるまで、ORX-11基板のD301のコネクターを少しずつ抜きます。そして、Gランプ/VA-99基板が点灯するように ⊘RV304/VA-99基板を調整します。
2. D301のコネクターを差し、レベル "A" が220±10 mVp-pになった時、Gランプが消灯することを確認します。
3. 同様にB-ch, R-chについても同じ方法で行ないます。

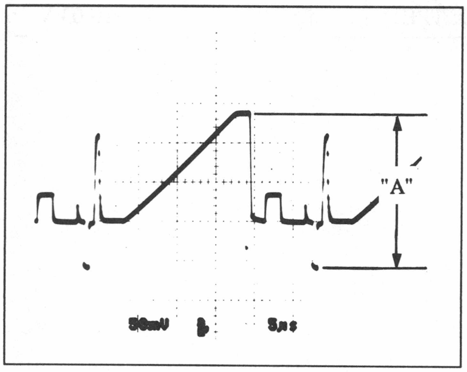

	コネクター/ORX-11基板	測定点/VA-99基板	調整箇所/VA-99基板
G-ch	D301	TP301 (GND: E301)	⊘RV304
B-ch	D201	TP201 (GND: E201)	⊘RV204
R-ch	D101	TP101 (GND: E101)	⊘RV104

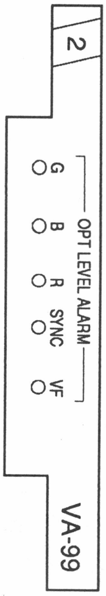
2
G
B
R
SYNC
VF
OPT LEVEL ALARM
VA-99

(PANEL SIDE)

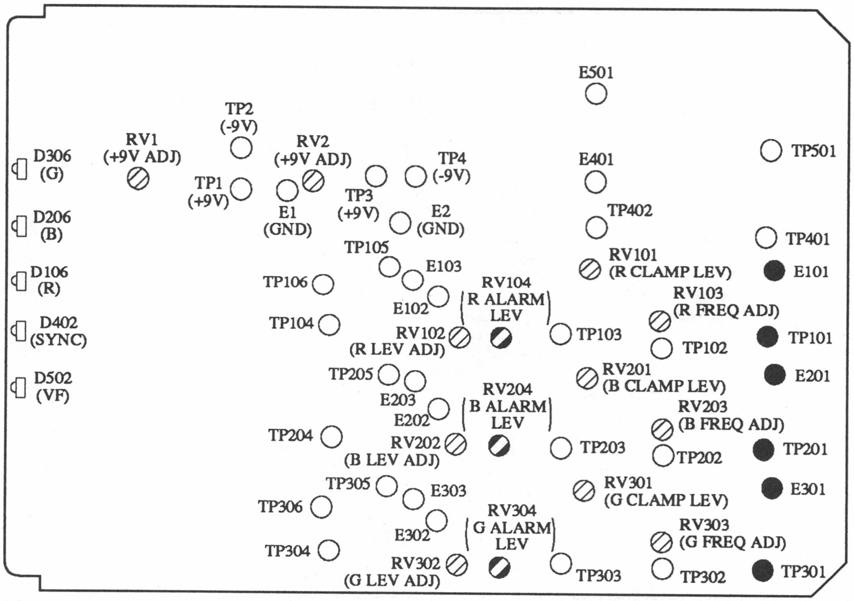
E501
TP2 (-9V)
RV1 (+9V ADJ)
RV2 (+9V ADJ)
TP4 (-9V)
E401
TP501
D306 (G)
TP1 (+9V)
TP3 (+9V)
E1 (GND)
E2 (GND)
D206 (B)
TP402
TP401
TP105
E103
RV101 (R CLAMP LEV)
E101
D106 (R)
TP106
RV104 R ALARM LEV
RV103 (R FREQ ADJ)
E102
D402 (SYNC)
TP104
RV102 (R LEV ADJ)
TP103
TP101
TP102
TP205
RV201 (B CLAMP LEV)
E201
D502 (VF)
E203
RV204 B ALARM LEV
RV203 (B FREQ ADJ)
E202
TP204
RV202 (B LEV ADJ)
TP203
TP202
TP201
TP305
E303
RV301 (G CLAMP LEV)
E301
TP306
RV304 G ALARM LEV
RV303 (G FREQ ADJ)
E302
TP304
RV302 (G LEV ADJ)
TP303
TP302
TP301

VA-99 BOARD (COMPONENT SIDE)

4-2-11. +20 V/+5 V (A)/+5 V (D)調整 (AU-135基板)

測定器: デジタル電圧計

基板延長: AU-135基板

調整手順:

測定箇所/ AU-135基板	調整箇所/ AU-135基板	規格
TP1 (GND: TPE1)	⊘RV1	20.00±0.03 V
TP3 (GND: TPE1)	⊘RV2	5.00±0.03 V
TP5 (GND: TPE1)	⊘RV3	5.00±0.03 V

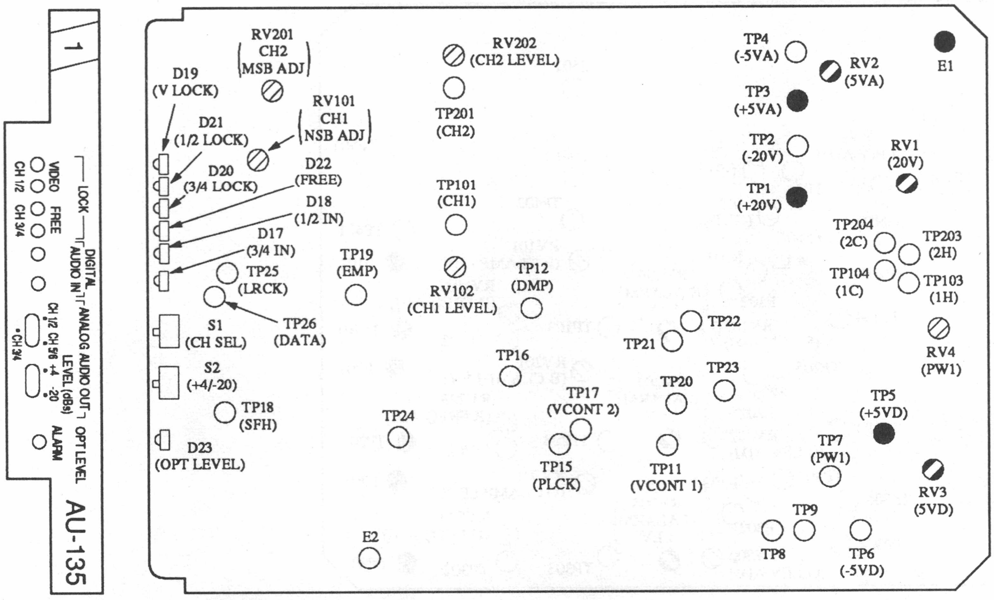
1
LOCK
VIDEO
FREE
CH 1/2
CH 3/4
DIGITAL AUDIO IN
ANALOG AUDIO OUT
CH 1/2 CH 5/6
•CH 3/4
+4 -20
LEVEL (dBs)
ALARM
OPT LEVEL
AU-135
RV201 CH2 MSB ADJ
RV202 (CH2 LEVEL)
D19 (V LOCK)
D21 (1/2 LOCK)
RV101 CH1 NSB ADJ
TP201 (CH2)
D20 (3/4 LOCK)
D22 (FREE)
D18 (1/2 IN)
TP101 (CH1)
D17 (3/4 IN)
TP19 (EMP)
TP25 (LRCK)
TP12 (DMP)
RV102 (CH1 LEVEL)
TP26 (DATA)
S1 (CH SEL)
S2 (+4/-20)
TP18 (SFH)
TP24
D23 (OPT LEVEL)
E2
TP16
TP17 (VCONT 2)
TP15 (PLCK)
TP11 (VCONT 1)
TP20
TP21
TP22
TP23
TP4 (-5VA)
RV2 (5VA)
E1
TP3 (+5VA)
TP2 (-20V)
RV1 (20V)
TP1 (+20V)
TP204 (2C)
TP203 (2H)
TP104 (1C)
TP103 (1H)
RV4 (PW1)
TP5 (+5VD)
TP7 (PW1)
RV3 (5VD)
TP9
TP8
TP6 (-5VD)

(PANEL SIDE) AU-135 BOARD (COMPONENT SIDE)

4-2-12. PULSE WIDTH調整 (AU-135基板)

測定器: オシロスコープ

基板延長: AU-135基板

調整手順:

1. オシロスコープCH-1のプローブをTP18/AU-135基板 (GND:TPE2), CH-2のプローブをTP7/AU-135基板 (GND: TPE2) に接続します。
2. 次のような波形が見えるようにオシロスコープを設定します。

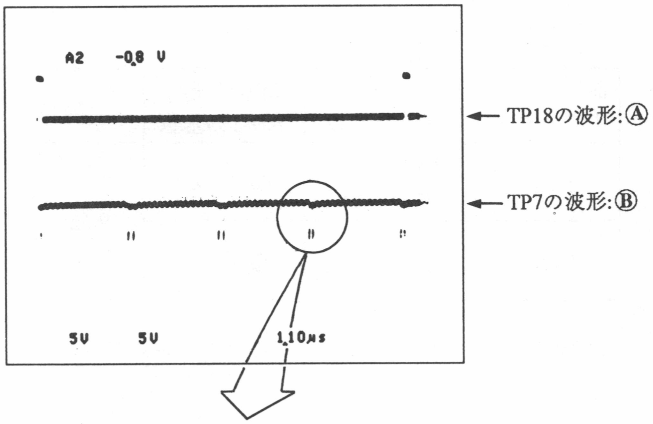

パルスとパルスの間隔が
最も狭い部分を拡大します。

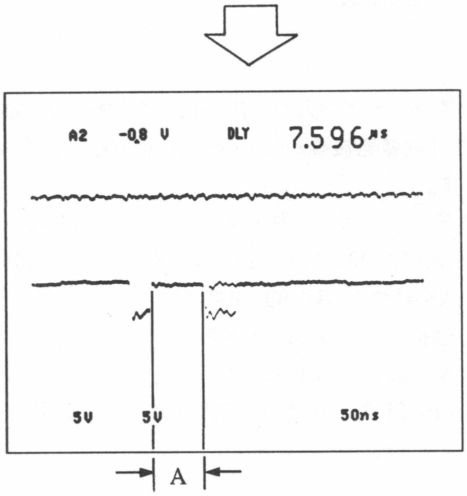

3. 上の波形パルス幅:Aを調整します。
A=70±3 ns

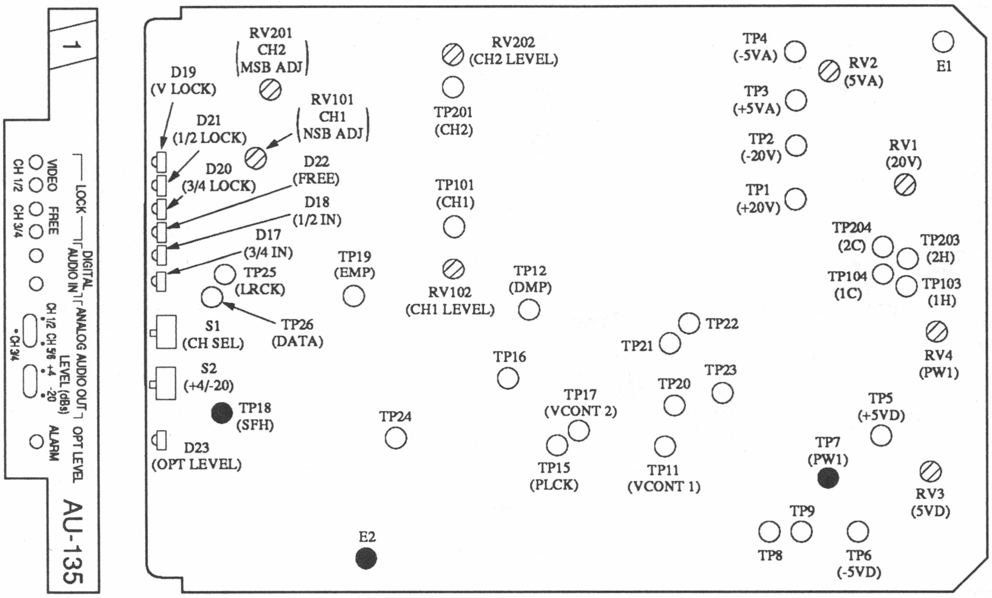
1
LOCK
VIDEO FREE
CH 1/2 CH 3/4
DIGITAL AUDIO IN
ANALOG AUDIO OUT LEVEL (dBs)
CH 1/2 CH 5/6 +4 -20
CH 3/4
ALARM
OPT LEVEL
AU-135
RV201 CH2 MSB ADJ
D19 (V LOCK)
D21 (1/2 LOCK)
RV101 CH1 NSB ADJ
D20 (3/4 LOCK)
D22 (FREE)
D18 (1/2 IN)
D17 (3/4 IN)
TP25 (LRCK)
TP26 (DATA)
S1 (CH SEL)
S2 (+4/-20)
TP18 (SFH)
D23 (OPT LEVEL)
RV202 (CH2 LEVEL)
TP201 (CH2)
TP101 (CH1)
TP19 (EMP)
RV102 (CH1 LEVEL)
TP12 (DMP)
TP24
TP16
TP17 (VCONT 2)
TP15 (PLCK)
E2
TP21
TP22
TP20
TP23
TP11 (VCONT 1)
TP4 (-5VA)
RV2 (5VA)
E1
TP3 (+5VA)
TP2 (-20V)
RV1 (20V)
TP1 (+20V)
TP204 (2C)
TP203 (2H)
TP104 (1C)
TP103 (1H)
RV4 (PW1)
TP5 (+5VD)
TP7 (PW1)
RV3 (5VD)
TP9
TP8
TP6 (-5VD)

(PANEL SIDE) AU-135 BOARD (COMPONENT SIDE)

4-2-13. AUDIO LEVEL調整 (AU-135基板)

測定器: オーディオアナライザ，オシロスコープ

基板延長: AU-135基板

準備:

- オーディオアナライザの入力、出力端子を短絡 (Zo=600 Ω, Zi=10 kΩ) させ内蔵発振器からの信号 (f=1 kHz, level=24 dBs) を確認します。
- オーディオアナライザ；入力インピーダンス→600 Ω
- HDFT-300；LEVEL SW/CONNECTOR PANEL→+4 dBs
- HDFR-300；ANALOG AUDIO OUT
  選択スイッチ/AU-135基板→CH 5/6
  ANALOG AUDIO OUT
  LEVELスイッチ/AU-135基板→+4 dBs側

調整手順:

1. 次図の様な接続をします。

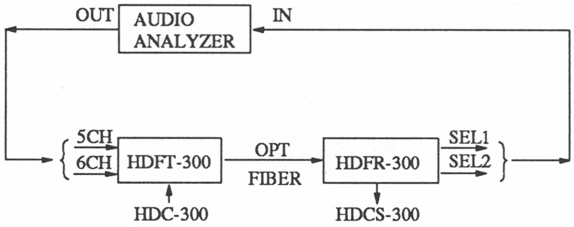
OUT
AUDIO ANALYZER
IN
5CH
6CH
HDFT-300
OPT
FIBER
HDFR-300
SEL1
SEL2
HDC-300
HDCS-300

2. 次の波形になるように次表に示す所を調整して下さい。

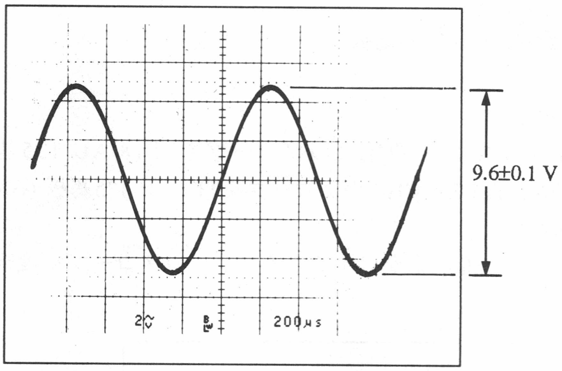

測定チャンネル	測定点/AU-135基板	調整箇所/AU-135基板	規格
5-ch	TP101 (GND: TPE1)	⊘RV102	9.6±0.1 V
6-ch	TP201 (GND: TPE1)	⊘RV202	

注意事項: この設定のまま、次の調整へ進みます。

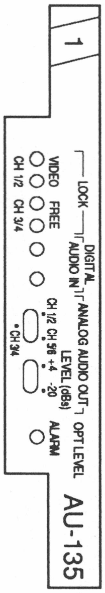
1
LOCK
VIDEO
FREE
CH 1/2
CH 3/4
DIGITAL AUDIO IN
ANALOG AUDIO OUT
CH 1/2
CH 5/6
CH 3/4
+4
-20
LEVEL (dBs)
ALARM
OPT LEVEL
AU-135

(PANEL SIDE)

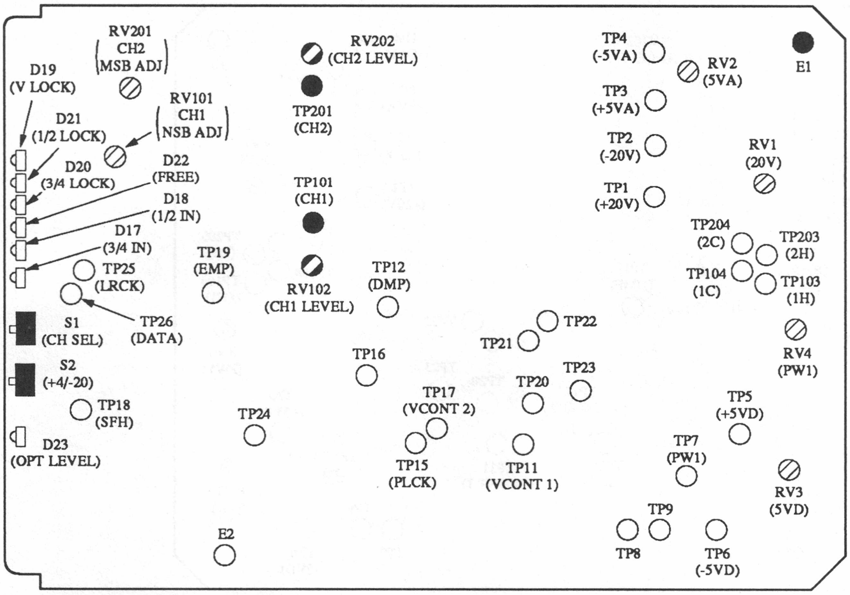
RV201 (CH2 MSB ADJ)
D19 (V LOCK)
RV101 (CH1 NSB ADJ)
D21 (1/2 LOCK)
D20 (3/4 LOCK)
D22 (FREE)
D18 (1/2 IN)
D17 (3/4 IN)
TP25 (LRCK)
TP26 (DATA)
TP19 (EMP)
S1 (CH SEL)
S2 (+4/-20)
TP18 (SFH)
D23 (OPT LEVEL)
TP24
E2
RV202 (CH2 LEVEL)
TP201 (CH2)
TP101 (CH1)
RV102 (CH1 LEVEL)
TP12 (DMP)
TP16
TP17 (VCONT 2)
TP15 (PLCK)
TP11 (VCONT 1)
TP21
TP22
TP20
TP23
TP4 (-5VA)
RV2 (5VA)
E1
TP3 (+5VA)
TP2 (-20V)
RV1 (20V)
TP1 (+20V)
TP204 (2C)
TP203 (2H)
TP104 (1C)
TP103 (1H)
RV4 (PW1)
TP5 (+5VD)
TP7 (PW1)
RV3 (5VD)
TP9
TP8
TP6 (-5VD)

AU-135 BOARD (COMPONENT SIDE)

4-2-14. MSB調整 (AU-135基板)

注意事項: この調整において、使用するオーディオアナライザーにMONITOR OUTPUT端子がついていない場合には、オシロスコープによる波形の観測をしなくてもかまいません。

測定器: オーディオアナライザ, オシロスコープ

基板延長: AU-135基板

準備:

- オーディオアナライザを歪率測定モードにします。
- オシロスコープの入力端子とオーディオアナライザのMONITOR OUTPUT端子を接続します。
- オーディオアナライザ ; 30 kHz L.P.F→ON
  OUTPUT LEVEL→+4 dBs
  (Zo=600 Ω, Zi=10 kΩで測定)

調整手順:

測定チャンネル	調整箇所/AU-135基板	規格
5-ch	⊘RV101	歪率最小 (0.05%以下) 且つ、 MONITOR OUTPUT の波形を次のようにする。
6-ch	⊘RV201	

MONITOR OUTPUTの波形

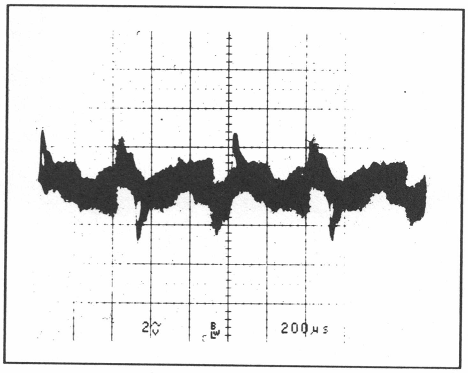

NG

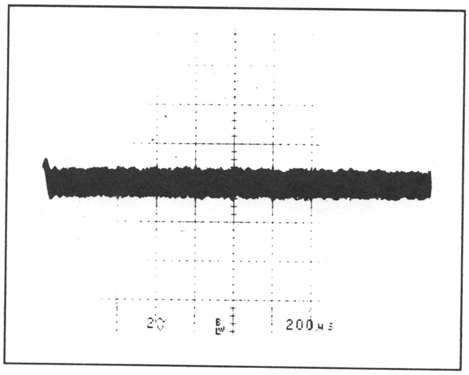

OK

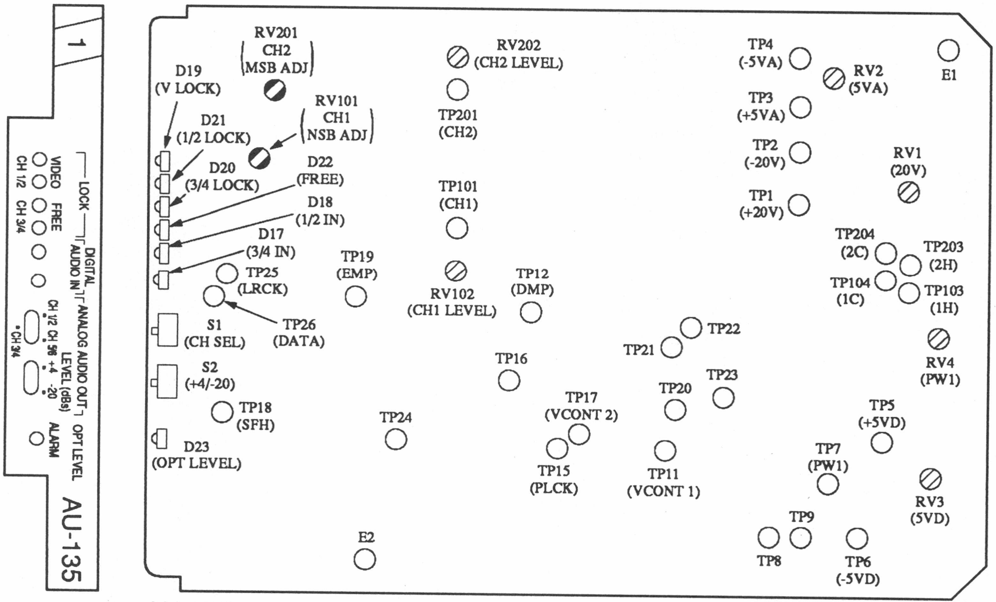
1
LOCK
VIDEO
FREE
CH 1/2
CH 3/4
DIGITAL AUDIO IN
ANALOG AUDIO OUT
CH 1/2
CH 5/6
•CH 3/4
LEVEL (dBs)
+4
-20
OPT LEVEL
ALARM
AU-135
RV201 CH2 MSB ADJ
D19 (V LOCK)
RV101 CH1 MSB ADJ
D21 (1/2 LOCK)
D20 (3/4 LOCK)
D22 (FREE)
D18 (1/2 IN)
D17 (3/4 IN)
TP25 (LRCK)
TP26 (DATA)
S1 (CH SEL)
S2 (+4/-20)
TP18 (SFH)
D23 (OPT LEVEL)
TP19 (EMP)
TP24
E2
RV202 (CH2 LEVEL)
TP201 (CH2)
TP101 (CH1)
RV102 (CH1 LEVEL)
TP12 (DMP)
TP16
TP17 (VCONT 2)
TP15 (PLCK)
TP11 (VCONT 1)
TP21
TP22
TP20
TP23
TP4 (-5VA)
TP3 (+5VA)
TP2 (-20V)
TP1 (+20V)
RV2 (5VA)
E1
RV1 (20V)
TP204 (2C)
TP203 (2H)
TP104 (1C)
TP103 (1H)
RV4 (PW1)
TP5 (+5VD)
TP7 (PW1)
RV3 (5VD)
TP9
TP8
TP6 (-5VD)

(PANEL SIDE) AU-135 BOARD (COMPONENT SIDE)

SECTION 4
ALIGNMENT

4-1. PREPARATION

4-1-1. Equipment Required

J-6029-140-A	Pattern Box PTB-500

PTB-100 is also available.

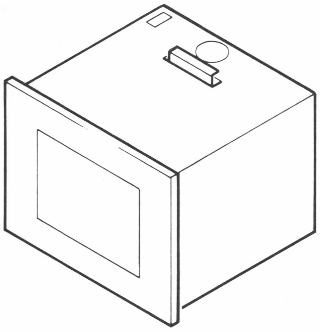

J-6026-110-A	Burst Chart

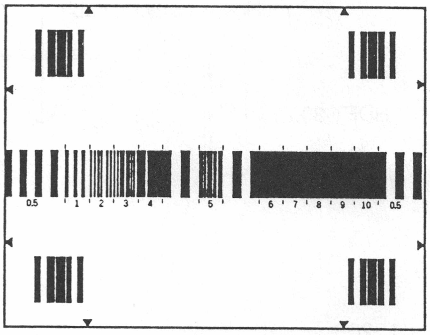

A-7515-188-A	Extension board EX-252

Supplied accessory

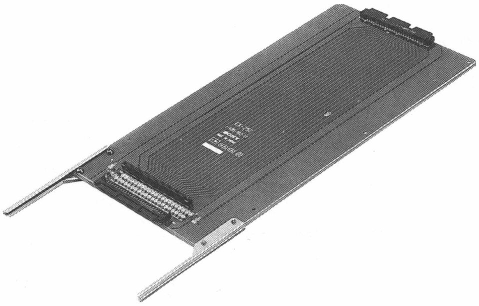

- HDVS Camera System
  - HD Color Camera HDC-300
  - HD Camera Signal Processor HDCS-300
  - HD Camera Operational Control Unit HDCO-300
  - HD Optical Fiber Transmitter HDFT-300
- HDVS Monitor
  - HDM-1220 or equivalent
  - HDM-90 or equivalent

Measuring Equipment
- Digital Voltmeter
- Oscilloscope (Tektronix 2465 or equivalent)
- Frequency Counter
- HDVS Waveform Monitor (Tektronix 1730HD or equivalent)
- Audio Analyzer (Shibasoku AH87B or equivalent)

4-1-2. Connection

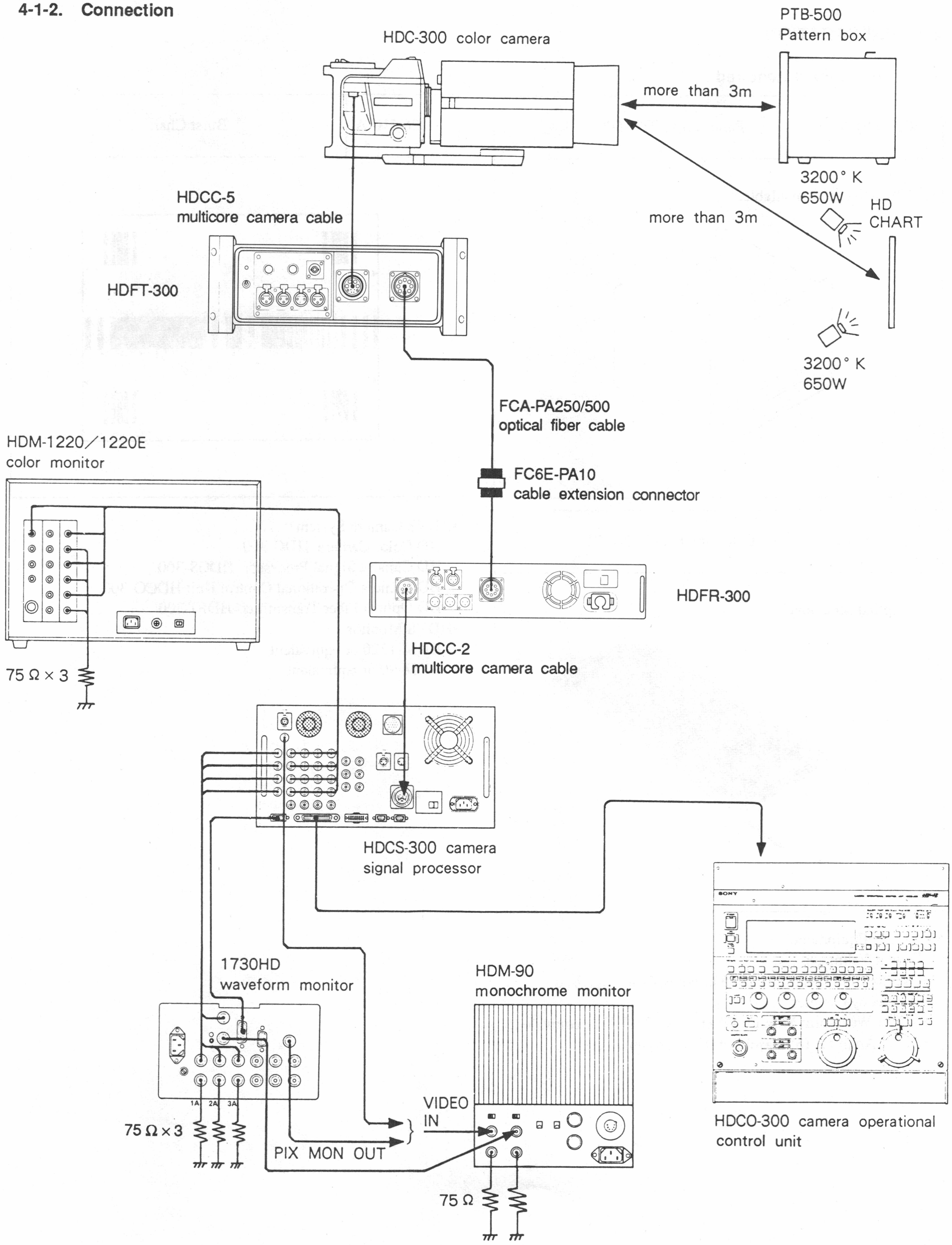
HDC-300 color camera
PTB-500
Pattern box
more than 3m
more than 3m
3200° K
650W
HD
CHART
3200° K
650W
HDCC-5
multicore camera cable
HDFT-300
FCA-PA250/500
optical fiber cable
HDM-1220／1220E
color monitor
FC6E-PA10
cable extension connector
HDFR-300
75 Ω × 3
HDCC-2
multicore camera cable
HDCS-300 camera
signal processor
1730HD
waveform monitor
HDM-90
monochrome monitor
1A
2A
3A
75 Ω × 3
VIDEO
IN
PIX MON OUT
75 Ω
HDCO-300 camera operational
control unit

4-1-3. Note on Adjustment

- The power supply unit supplies considerable power of high voltage, so take precautions to prevent electric shock during the adjustment.

- Completely-aligned HDVS camera system is required for adjustment.

- Be sure to turn off the power of the HDFR before connecting the system or extracting PC board.

- For details on the operation and initial setting of individual HDVS system equipment, follow the operation manual supplied with each equipment.

- Before beginning adjustments, warm up all of the HDVS system for about 30 minutes.

- Use the two optical fiber cables (FC6-PA250) connected via the cable extension connector (FC6E-PA10) for connection between the HDFR-300 and the HDFT-300, otherwise specified. Without the optical fiber cable of 250 m (FC6-PA250), one cable of 500m (FC6-PA500) is usable.

- Do not adjust the following controls on the OTX-11 board, maintaining them at the factory-set position.

⊘ RV101	↺ Fully counterclockwise
⊘ RV201	
⊘ RV102	↻ Fully clockwise
⊘ RV202	

4-2. ADJUSTMENT ITEMS

4-2-1. Power Supply Adjustment (PS-228 Board)
4-2-2. +9 V Adjustment (VA-99 Board)
4-2-3. SYNC Clamp Level Adjustment (VA-99 Board)
4-2-4. +9 V Adjustment (OTX-11 Board)
4-2-5. +9 V Adjustment (ORX-11 Board)
4-2-6. OPT G/B/R Frequency Response Adjustment (ORX-11 Board)
4-2-7. Audio Frequency Response Adjustment (ORX-11 Board)
4-2-8. G/B/R Signal Level Adjustment (VA-99 Board)
4-2-9. G/B/R Freqency Response Adjustment (VA-99 Board)
4-2-10. OPT Level Alarm G/B/R Lamp Adjustment (VA-99 Board)
4-2-11. +20 V/+5 V (A)/+5 V (D) Adjustment (AU-135 Board)
4-2-12. Pulse Width Adjustment (AU-135 Board)
4-2-13. Audio Level Adjustment (AU-135 Board)
4-2-14. MSB Adjustment (AU-135 Board)

4-2-1. POWER SUPPLY ADJUSTMENT (PS-228 BOARD)

Note:
Do not perform this adjustment for a routine maintenance because the power supply unit supplies the considerable power of the high voltage. If necessary, take the greatest possible care to prevent electric shock during the adjustment.

Equipment: Digital voltmeter

Preparation:
Turn off the power. Remove the top panel of the unit and pull out the power supply unit. Remove the top cover of the power supply unit and reinstall the power supply unit. Then turn on the power and perform the following adjustment. After the adjustment, turn off the power and install the top cover of the power supply unit, taking care of electric shock. In removing and installing the top cover of the power supply unit, be sure to disconnect the power cord.

Adjustment procedure:

Test Point /PS-228 board	Adj. Point /PS-228 board	Specification
TP1 (GND: E1)	⊘ RV202	20.75±0.02 V
TP2 (GND: E1)	⊘ RV203	9.75±0.02 V
TP3 (GND: E1)	⊘ RV201	5.75±0.02 V

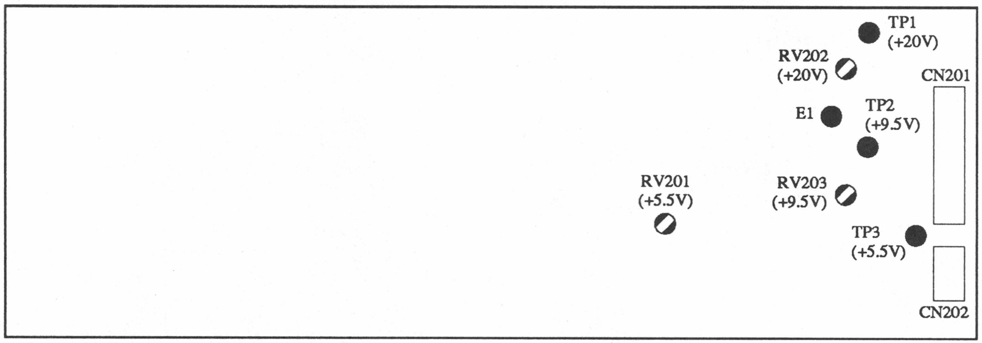

PS-228 BOARD (COMPONENT SIDE)

4-2-2. +9 V ADJUSTMENT (VA-99 BOARD)

Equipment: Digital voltmeter

To be extended: VA-99 board

Adjustment procedure:

Test point/ VA-99 board	Adj. point/ VA-99 board	Specifications
TP1 (GND: E1)	⊘ RV1	9.00±0.03 V
TP3 (GND: E2)	⊘ RV2	9.00±0.03 V

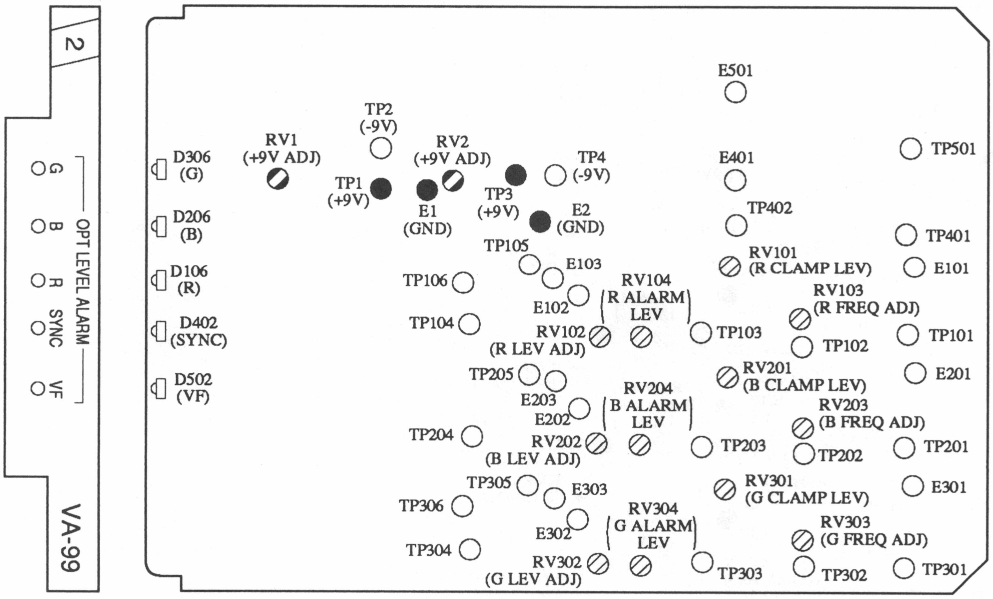

2
G
B
R
SYNC
VF
OPT LEVEL ALARM
VA-99
D306 (G)
D206 (B)
D106 (R)
D402 (SYNC)
D502 (VF)
RV1 (+9V ADJ)
TP2 (-9V)
TP1 (+9V)
E1 (GND)
RV2 (+9V ADJ)
TP3 (+9V)
TP4 (-9V)
E2 (GND)
TP105
TP106
E103
E102
RV104 (R ALARM LEV)
TP104
RV102 (R LEV ADJ)
TP205
E203
E202
RV204 (B ALARM LEV)
TP204
RV202 (B LEV ADJ)
TP305
E303
TP306
E302
RV304 (G ALARM LEV)
TP304
RV302 (G LEV ADJ)
E501
E401
TP402
TP501
TP401
RV101 (R CLAMP LEV)
E101
RV103 (R FREQ ADJ)
TP103
TP102
TP101
RV201 (B CLAMP LEV)
E201
RV203 (B FREQ ADJ)
TP203
TP202
TP201
RV301 (G CLAMP LEV)
E301
RV303 (G FREQ ADJ)
TP303
TP302
TP301

(PANEL SIDE) VA-99 BOARD (COMPONENT SIDE)

4-2-3. SYNC CLAMP LEVEL ADJUSTMENT (VA-99 BOARD)

Equipment: Oscilloscope

To be extended: VA-99 board

Preparation:

- To output the test signal, press the TEST CHU switch on the HDCO-300.

Adjustment procedure:

1. Adjust ⊘RV301/VA-99 board so that the sync clamp level "A" meets the specification.
2. Perform the same manner for B-ch and R-ch.

	Test Point/ VA-99 board	Adj. Point/ VA-99 board	Specification
G-ch	TP303 (GND: E302)	⊘ RV301	A=75±5 mV
B-ch	TP203 (GND: E202)	⊘ RV201	
R-ch	TP103 (GND: E102)	⊘ RV101	

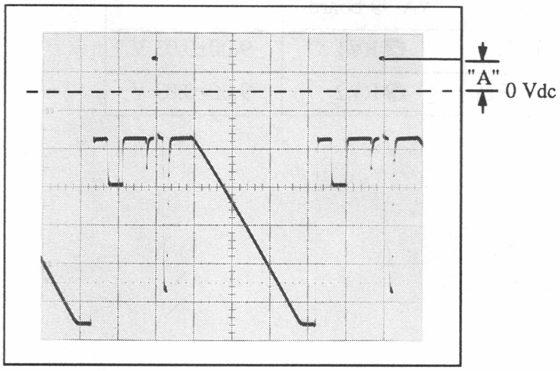

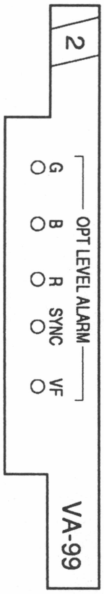

2
O G
O B
O R
O SYNC
O VF
OPT LEVEL ALARM
VA-99

(PANEL SIDE)

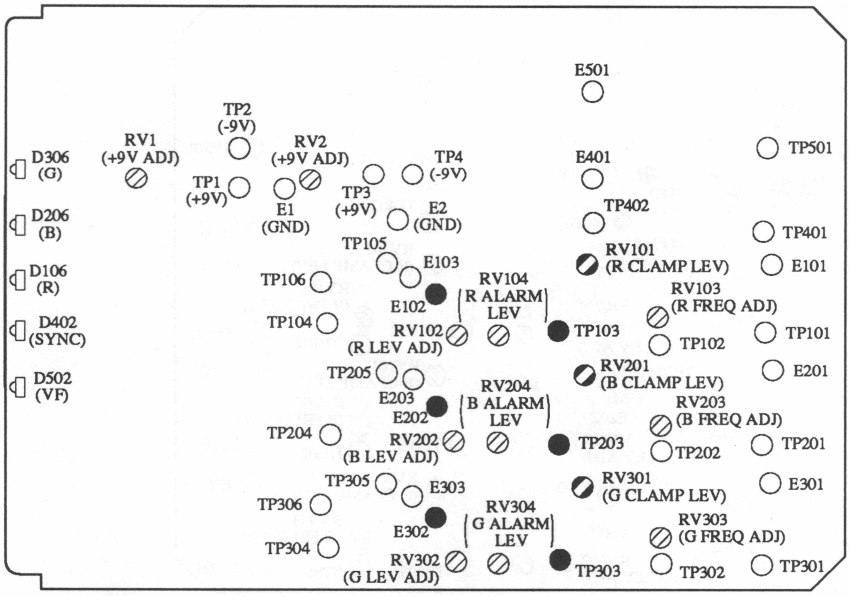

E501
D306 (G)
RV1 (+9V ADJ)
TP2 (-9V)
RV2 (+9V ADJ)
TP4 (-9V)
E401
TP501
TP1 (+9V)
TP3 (+9V)
D206 (B)
E1 (GND)
E2 (GND)
TP402
TP401
TP105
RV101 (R CLAMP LEV)
E101
D106 (R)
TP106
E103
RV104 (R ALARM LEV)
RV103 (R FREQ ADJ)
E102
D402 (SYNC)
TP104
RV102 (R LEV ADJ)
TP103
TP102
TP101
TP205
RV201 (B CLAMP LEV)
E201
D502 (VF)
E203
RV204 (B ALARM LEV)
RV203 (B FREQ ADJ)
E202
TP204
RV202 (B LEV ADJ)
TP203
TP202
TP201
TP305
E303
RV301 (G CLAMP LEV)
E301
TP306
RV304 (G ALARM LEV)
RV303 (G FREQ ADJ)
E302
TP304
RV302 (G LEV ADJ)
TP303
TP302
TP301

VA-99 BOARD (COMPONENT SIDE)

4-2-4. +9 V ADJUSTMENT (OTX-11 BOARD)

Equipment: Digital voltmeter

To be extended: OTX-11 board

Test point: TP1 (GND: E1)/OTX-11 board

Adjusting point: ⊘ RV1/OTX-11 board

Specification: 9.00±0.03 V

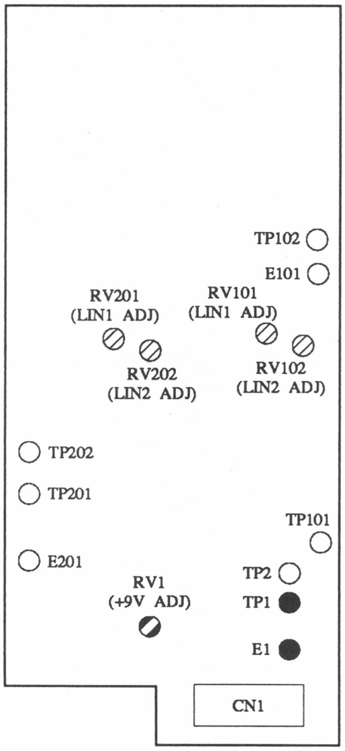
TP102
E101
RV201
(LIN1 ADJ)
RV101
(LIN1 ADJ)
RV202
(LIN2 ADJ)
RV102
(LIN2 ADJ)
TP202
TP201
TP101
E201
RV1
(+9V ADJ)
TP2
TP1
E1
CN1

OTX-11 BOARD (COMPONENT SIDE)

4-2-5 +9 V ADJUSTMENT (ORX-11 BOARD)

Equipment: Digital voltmeter

To be extended: ORX-11 board

Test point: TP1 (GND: E1)/ORX-11 board

Adjusting point: ⊘ RV1/ORX-11 board

Specification: 9.00±0.03 V

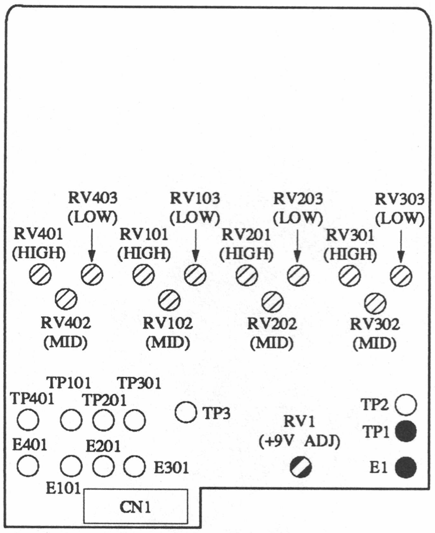
RV403
(LOW)
RV103
(LOW)
RV203
(LOW)
RV303
(LOW)
RV401
(HIGH)
RV101
(HIGH)
RV201
(HIGH)
RV301
(HIGH)
RV402
(MID)
RV102
(MID)
RV202
(MID)
RV302
(MID)
TP101
TP301
TP401
TP201
TP3
RV1
(+9V ADJ)
TP2
TP1
E401
E201
E301
E1
E101
CN1

ORX-11 BOARD (COMPONENT SIDE)

4-2-6. OPT G/B/R FREQUENCY RESPONSE ADJUSTMENT (ORX-11 BOARD)

Equipment: Oscilloscope

To be extended: OTX-10 board/HDFT-300

Object: Burst chart

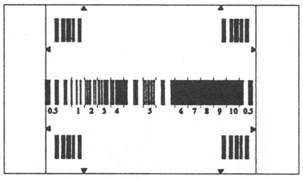

0.5
1
2
3
4
5
6
7
8
9
10
0.5

Monitor screen

Adjustment procedure:
Adjust the following potentiometers so that overall waveform is the same as reference waveform.

	Ref. waveform/ HDFT-300/ OTX-10 board	Test Point/ ORX-11 board	Adj. Point/ ORX-11 board
G-ch	TP301 (GND: TP302)	TP301 (GND: E301)	L: ⊘ RV302 M: ⊘ RV302 H: ⊘ RV301
B-ch	TP201 (GND: TP202)	TP201 (GND: E201)	L: ⊘ RV203 M: ⊘ RV202 H: ⊘ RV201
R-ch	TP101 (GND: TP102)	TP101 (GND: E101)	L: ⊘ RV103 M: ⊘ RV102 H: ⊘ RV101

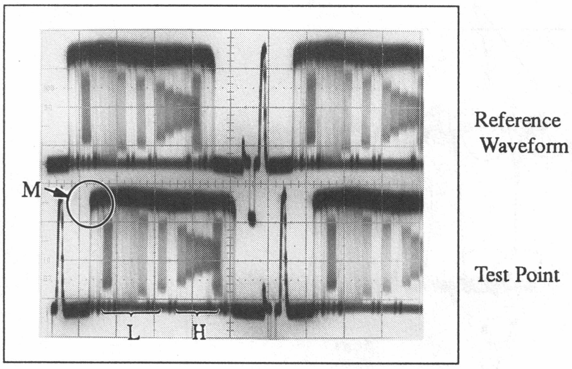

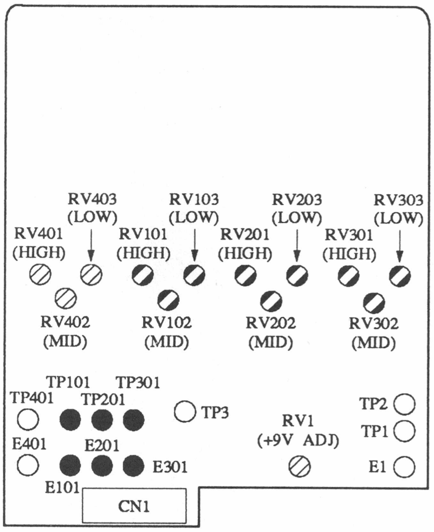

RV403 (LOW)
RV103 (LOW)
RV203 (LOW)
RV303 (LOW)
RV401 (HIGH)
RV101 (HIGH)
RV201 (HIGH)
RV301 (HIGH)
RV402 (MID)
RV102 (MID)
RV202 (MID)
RV302 (MID)
TP101
TP301
TP401
TP201
TP3
TP2
RV1 (+9V ADJ)
TP1
E401
E201
E301
E1
E101
CN1

ORX-11 BOARD (COMPONENT SIDE)

4-2-7. AUDIO FREQUENCY RESPONSE ADJUSTMENT (ORX-11 BOARD)

Note:
The pictures below are measured in use of 250 m OPT fiber cable (FC6-PA250). When 500 m OPT fiber cable (FC6-PA500) is used, the level will be decreased. However, either 250 m cable or 500 m cable can be used for this adjustment.

Equipment; Oscilloscope

Test Point TP401 (GND: E401)/ORX-11 board

Adjustment procedure:

1. Set ⊘ RV403, and ⊘ RV402/ORX-11 board to the mechanical center position.
2. Adjust ⊘ RV401/ORX-11 board so that the waveform of portion "A" is flat.

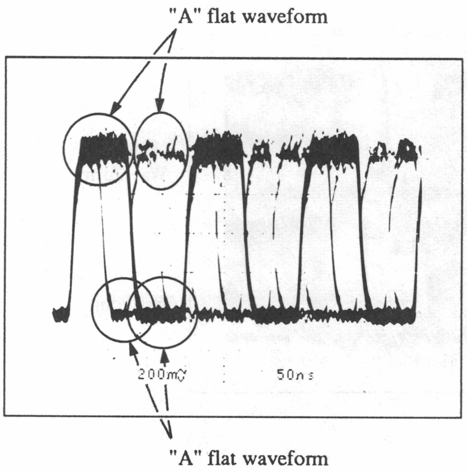

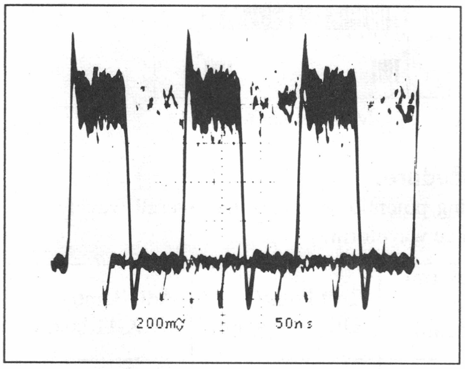

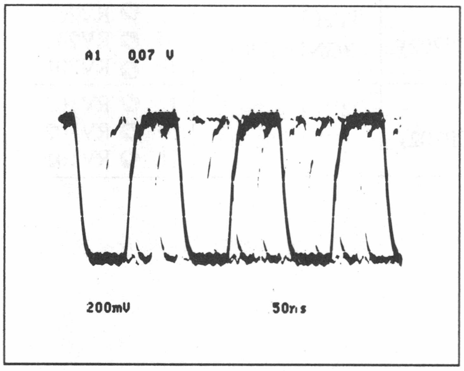

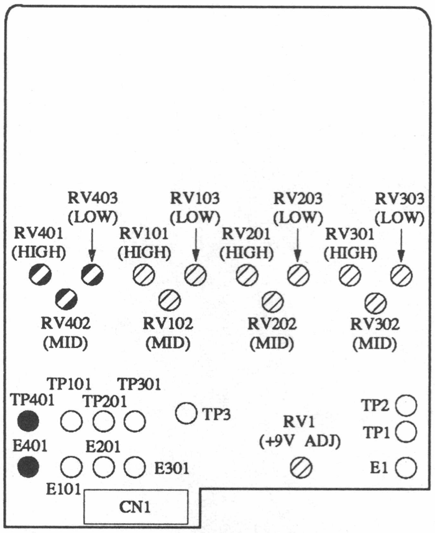
RV403 (LOW)
RV103 (LOW)
RV203 (LOW)
RV303 (LOW)
RV401 (HIGH)
RV101 (HIGH)
RV201 (HIGH)
RV301 (HIGH)
RV402 (MID)
RV102 (MID)
RV202 (MID)
RV302 (MID)
TP101
TP301
TP401
TP201
TP3
TP2
RV1 (+9V ADJ)
TP1
E401
E201
E301
E1
E101
CN1

ORX-11 BOARD (COMPONENT SIDE)

4-2-8. G/B/R SIGNAL LEVEL ADJUSTMENT (VA-99 BOARD)

Equipment: Oscilloscope

To be extended: VA-99 board
OTX-10 board/HDFT-300

Preparation:

- To output the test signal, press the TEST CHU switch on the HDCO-300.

Adjustment procedure:

1. Adjust ⊘RV302/VA-99 board so that the level "B" at TP304 /VA-99 board is doubled as compared with the level "A" at TP301/OTX-10 board.
2. Perform the same manner for B-ch and R-ch.

	Reference level/ HDFT-300 OTX-10 board	Test Point/ VA-99 board	Adj. Point/ VA-99 board
G-ch	TP301 (GND: TP302)	TP304 (GND: E302)	⊘RV302
B-ch	TP201 (GND: TP202)	TP204 (GND: E202)	⊘RV202
R-ch	TP101 (GND: TP102)	TP104 (GND: E102)	⊘RV102

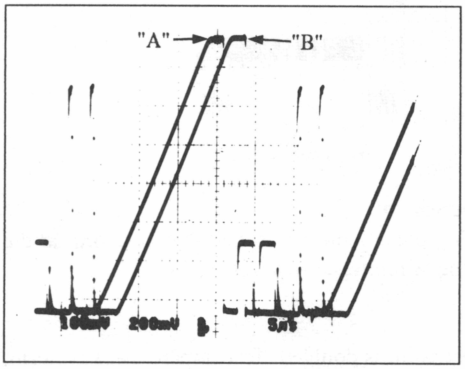

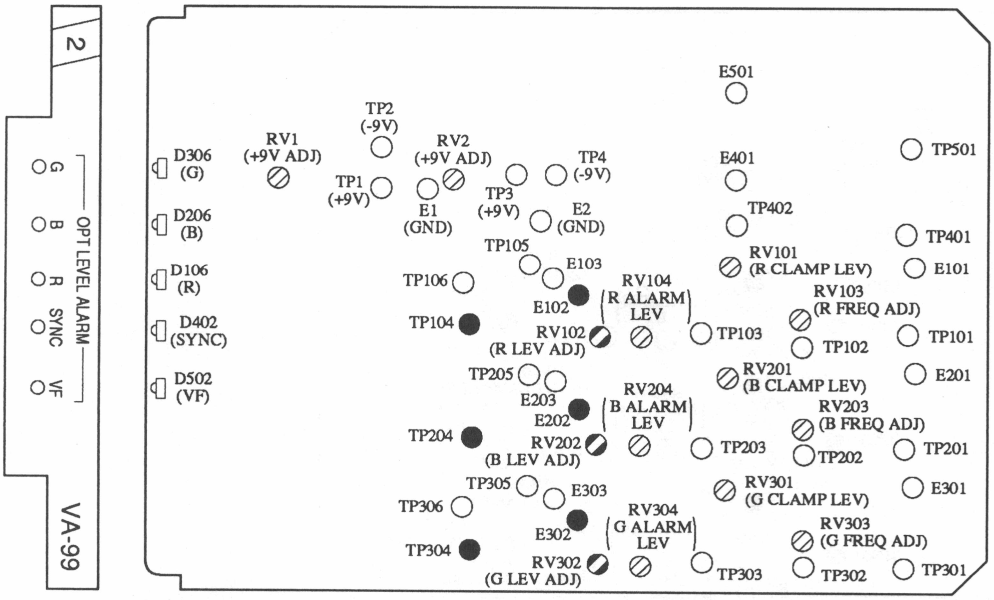
2
G
B
R
SYNC
VF
OPT LEVEL ALARM
VA-99
D306 (G)
D206 (B)
D106 (R)
D402 (SYNC)
D502 (VF)
RV1 (+9V ADJ)
TP2 (-9V)
TP1 (+9V)
RV2 (+9V ADJ)
E1 (GND)
TP3 (+9V)
TP4 (-9V)
E2 (GND)
TP105
E103
TP106
E102
TP104
RV104 (R ALARM LEV)
RV102 (R LEV ADJ)
TP103
TP205
E203
E202
TP204
RV204 (B ALARM LEV)
RV202 (B LEV ADJ)
TP203
TP305
E303
TP306
E302
TP304
RV304 (G ALARM LEV)
RV302 (G LEV ADJ)
TP303
E501
E401
TP402
TP501
TP401
RV101 (R CLAMP LEV)
E101
RV103 (R FREQ ADJ)
TP101
TP102
RV201 (B CLAMP LEV)
E201
RV203 (B FREQ ADJ)
TP202
TP201
RV301 (G CLAMP LEV)
E301
RV303 (G FREQ ADJ)
TP302
TP301

(PANEL SIDE) VA-99 BOARD (COMPONENT SIDE)

4-2-9. G/B/R FREQUENCY RESPONSE ADJUSTMENT (VA-99 BOARD)

Equipment:	Oscilloscope
To be extended:	VA-99 board OTX-10 board/HDFT-300
Object:	burst chart

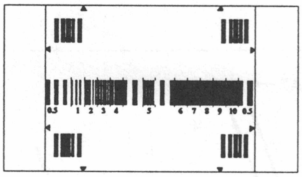
0.5
1
2
3
4
5
6
7
8
9
10
0.5

Monitor screen

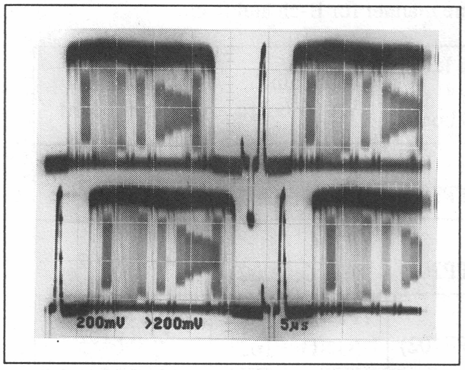

Reference Waveform

Test Point

Adjustment procedure:
Adjust the following potentiometers so that the waveform at the test point is the same as reference waveform.

Note:
The level at the test point is doubled. To compare the waveform, adjust the VOLTS/DIV control knob of the oscilloscope.

	Ref. waveform/ HDFT-300 OTX-10 board	Test Point/ VA-99 board	Adj. Point/ VA-99 board
G-ch	TP301 (GND: TP302)	TP304 (GND: E303)	⊘ RV303
B-ch	TP201 (GND: TP202)	TP204 (GND: E203)	⊘ RV203
R-ch	TP101 (GND: TP102)	TP104 (GND: E103)	⊘ RV103

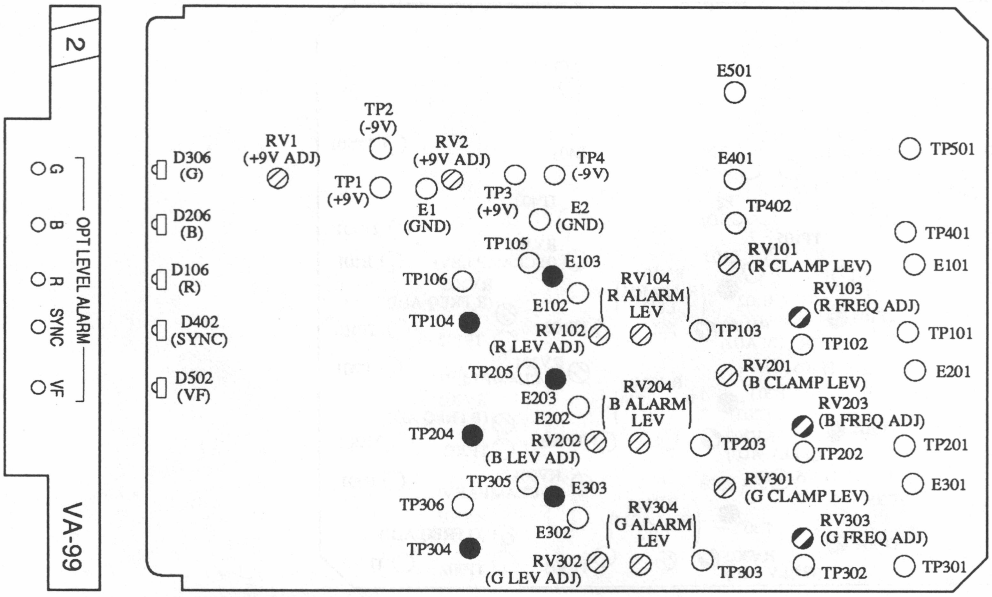
2
G
B
R
SYNC
VF
OPT LEVEL ALARM
VA-99
D306 (G)
D206 (B)
D106 (R)
D402 (SYNC)
D502 (VF)
RV1 (+9V ADJ)
TP2 (-9V)
TP1 (+9V)
RV2 (+9V ADJ)
E1 (GND)
TP3 (+9V)
TP4 (-9V)
E2 (GND)
TP105
E103
TP106
E102
TP104
RV102 (R LEV ADJ)
RV104 (R ALARM LEV)
TP205
E203
E202
TP204
RV202 (B LEV ADJ)
RV204 (B ALARM LEV)
TP305
E303
TP306
E302
TP304
RV302 (G LEV ADJ)
RV304 (G ALARM LEV)
E501
E401
TP402
TP501
TP401
RV101 (R CLAMP LEV)
E101
RV103 (R FREQ ADJ)
TP103
TP102
TP101
RV201 (B CLAMP LEV)
E201
RV203 (B FREQ ADJ)
TP203
TP202
TP201
RV301 (G CLAMP LEV)
E301
RV303 (G FREQ ADJ)
TP303
TP302
TP301

(PANEL SIDE) VA-99 BOARD (COMPONENT SIDE)

4-2-10. OPT LEVEL ALARM G/B/R LAMP ADJUSTMENT (VA-99 BOARD)

Equipment: Oscilloscope

To be extended: VA-99 board
ORX-11 board

Preparation:

- To output the test signal, press the TEST CHU switch on the HDCO-300.

Adjustment procedure:

1. Pull carefully the D301 connector on the ORX-11 board until the level "A" at TP301/VA-99 board becomes 200±10 mVp-p observing the oscilloscope. Then, adjust ⊘ RV304/VA-99 board so that the G lamp lights up.
2. Insert the D301 connector a little until the level "A" becomes 220±10 mVp-p and make sure that the G lamp should go off.
3. Perform the same manner for B-ch and R-ch.

	Connector/ ORX-11 board	Test Point/ VA-99 board	Adj. Point/ VA-99 board
G-ch	D301	TP301 (GND: E301)	⊘ RV304
B-ch	D201	TP201 (GND: E201)	⊘ RV204
R-ch	D101	TP101 (GND: E101)	⊘ RV104

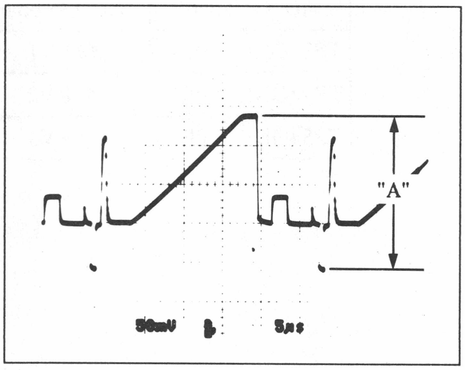

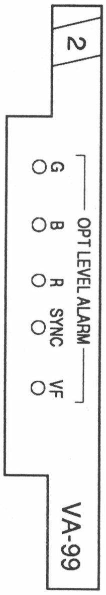
2
G
B
R
SYNC
VF
OPT LEVEL ALARM
VA-99

(PANEL SIDE)

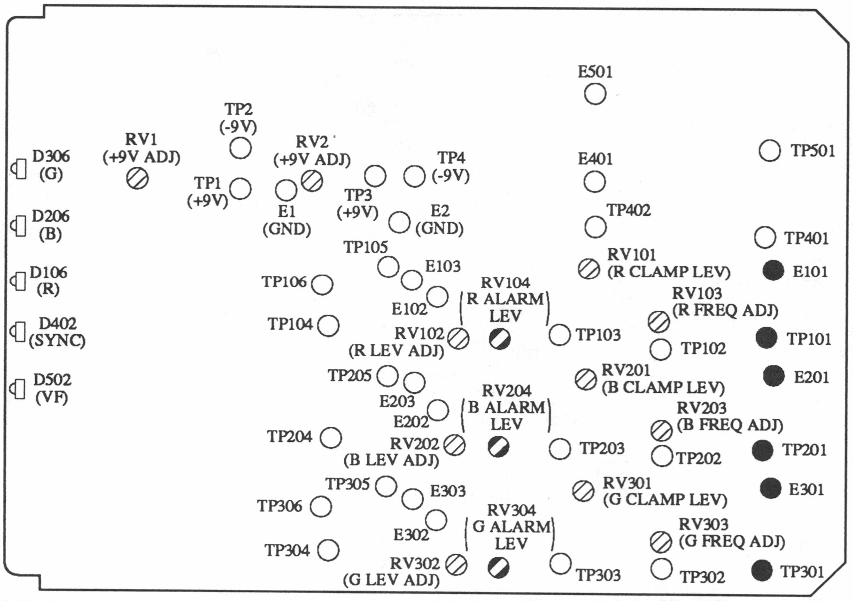
E501
TP2 (-9V)
RV1 (+9V ADJ)
RV2 (+9V ADJ)
D306 (G)
TP1 (+9V)
TP4 (-9V)
E401
TP501
D206 (B)
E1 (GND)
TP3 (+9V)
E2 (GND)
TP402
TP401
TP105
E103
RV101 (R CLAMP LEV)
E101
D106 (R)
TP106
RV104 R ALARM LEV
RV103 (R FREQ ADJ)
E102
D402 (SYNC)
TP104
RV102 (R LEV ADJ)
TP103
TP102
TP101
TP205
RV201 (B CLAMP LEV)
E201
D502 (VF)
E203
RV204 B ALARM LEV
RV203 (B FREQ ADJ)
E202
TP204
RV202 (B LEV ADJ)
TP203
TP202
TP201
TP305
E303
RV301 (G CLAMP LEV)
E301
TP306
RV304 G ALARM LEV
RV303 (G FREQ ADJ)
E302
TP304
RV302 (G LEV ADJ)
TP303
TP302
TP301

VA-99 BOARD (COMPONENT SIDE)

4-2-11. +20 V/+5 V(A)/+5 V(D) ADJUSTMENT (AU-135 BOARD)

Equipment: Digital voltmeter

To be extended: AU-135 board

Adjustment procedure:

Test Point/ AU-135 board	Adj. Point/ AU-135 board	Specification
TP1 (GND: TPE1)	⊘RV1	20.00±0.03 V
TP3 (GND: TPE1)	⊘RV2	5.00±0.03 V
TP5 (GND: TPE1)	⊘RV3	5.00±0.03 V

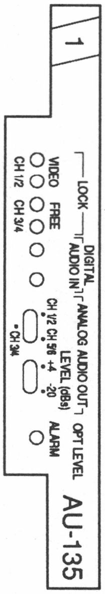
1
LOCK
VIDEO
FREE
CH 1/2
CH 3/4
DIGITAL AUDIO IN
ANALOG AUDIO OUT
CH 1/2 CH 5/6
+4 -20
*CH3/4
LEVEL (dBs)
OPT LEVEL
ALARM
AU-135

(PANEL SIDE)

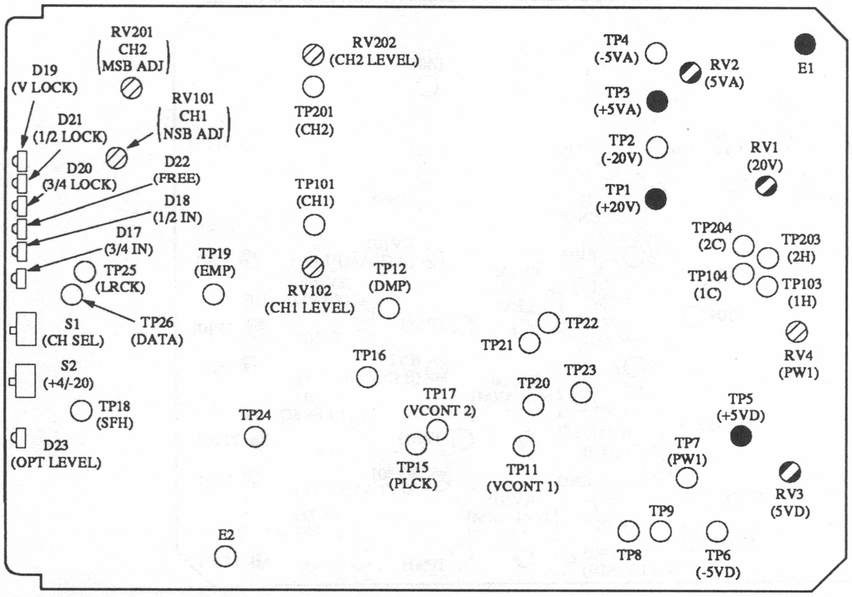
RV201
CH2
MSB ADJ
D19
(V LOCK)
RV101
CH1
NSB ADJ
D21
(1/2 LOCK)
D20
(3/4 LOCK)
D22
(FREE)
D18
(1/2 IN)
D17
(3/4 IN)
TP25
(LRCK)
TP26
(DATA)
TP19
(EMP)
S1
(CH SEL)
S2
(+4/-20)
TP18
(SFH)
D23
(OPT LEVEL)
RV202
(CH2 LEVEL)
TP201
(CH2)
TP101
(CH1)
RV102
(CH1 LEVEL)
TP12
(DMP)
TP16
TP24
TP17
(VCONT 2)
TP15
(PLCK)
TP11
(VCONT 1)
E2
TP21
TP22
TP20
TP23
TP4
(-5VA)
RV2
(5VA)
E1
TP3
(+5VA)
TP2
(-20V)
RV1
(20V)
TP1
(+20V)
TP204
(2C)
TP203
(2H)
TP104
(1C)
TP103
(1H)
RV4
(PW1)
TP5
(+5VD)
TP7
(PW1)
RV3
(5VD)
TP9
TP8
TP6
(-5VD)

AU-135 BOARD (COMPONENT SIDE)

4-2-12. PULSE WIDTH ADJUSTMENT (AU-135 BOARD)

Equipment: Oscilloscope

To be extended: AU-135 board

Preparation:

1. Connect the probe of the CH1 to TP18/AU-135 board (GND: TPE2) and that of the CH2 to TP7/AU135 board (GND: TPE2).
2. Set the oscilloscope so that the following waveform is displayed.

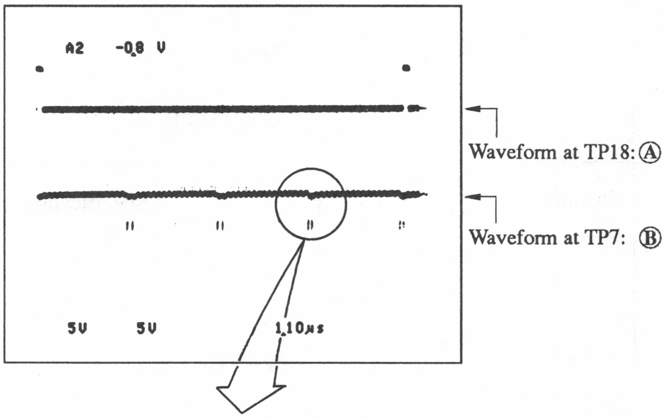

Enlarge the portion where the pulse interval is narrowest.

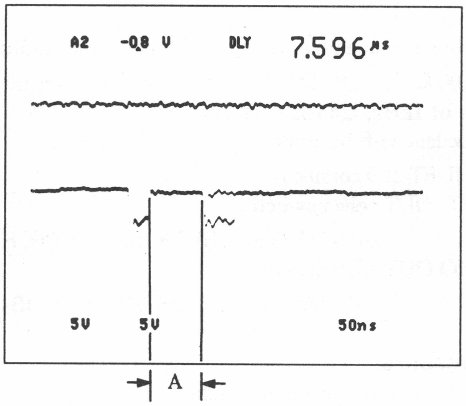

3. Adjust the pulse width A for 70 ±3nS.

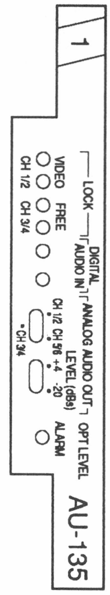
1
LOCK
VIDEO FREE
CH 1/2 CH 3/4
DIGITAL AUDIO IN
ANALOG AUDIO OUT
CH 1/2 CH 5/6 +4 -20
•CH 3/4
LEVEL (dBs)
OPT LEVEL
ALARM
AU-135

(PANEL SIDE)

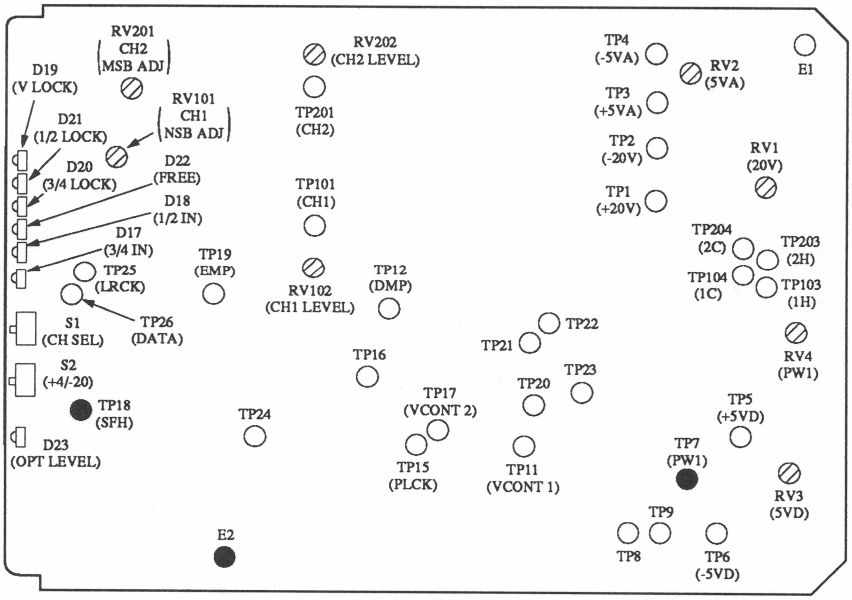
RV201 CH2 MSB ADJ
D19 (V LOCK)
D21 (1/2 LOCK)
RV101 CH1 NSB ADJ
D20 (3/4 LOCK)
D22 (FREE)
D18 (1/2 IN)
D17 (3/4 IN)
TP25 (LRCK)
TP19 (EMP)
TP26 (DATA)
S1 (CH SEL)
S2 (+4/-20)
TP18 (SFH)
D23 (OPT LEVEL)
TP24
E2
RV202 (CH2 LEVEL)
TP201 (CH2)
TP101 (CH1)
RV102 (CH1 LEVEL)
TP12 (DMP)
TP16
TP17 (VCONT 2)
TP15 (PLCK)
TP11 (VCONT 1)
TP21
TP22
TP20
TP23
TP4 (-5VA)
TP3 (+5VA)
TP2 (-20V)
TP1 (+20V)
RV2 (5VA)
E1
RV1 (20V)
TP204 (2C)
TP203 (2H)
TP104 (1C)
TP103 (1H)
RV4 (PW1)
TP5 (+5VD)
TP7 (PW1)
RV3 (5VD)
TP9
TP8
TP6 (-5VD)

AU-135 BOARD (COMPONENT SIDE)

4-2-13. AUDIO LEVEL ADJUSTMENT (AU-135 BOARD)

Equipment: Audio Analyzer

To be extended: AU-135 board

Preparation:

- Short between the input and output terminals of the audio analyzer (Zo=600 Ω, Zi=10k Ω). Check the signal from the built-in oscillator of 1kHz, -24dBs is output.
- Set the input impedance of the audio analyzer to 600 ohms.
- LEVEL switch/HDFT-300 connector panel → +4dBs
- ANALOG AUDIO OUT select switch /AU-135 board (HDFR-300) → 5/6CH
- ANALOG AUDIO OUT LEVEL switch /AU-135 board (HDFR-300) → +4dBs

Adjustment procedure:

1. Connect the audio analyzer as the illustration.

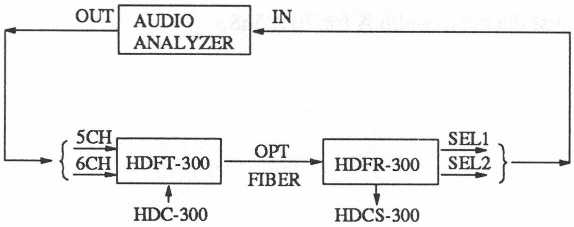
OUT
AUDIO ANALYZER
IN
5CH
6CH
HDFT-300
OPT
FIBER
HDFR-300
SEL1
SEL2
HDC-300
HDCS-300

2. Adjust the potentiometer shown in the table for the following waveform.

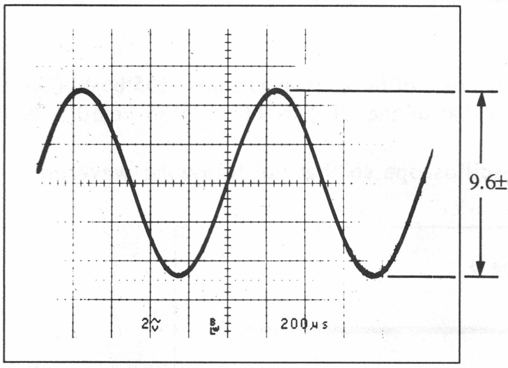

Channel	Test Point/ AU-135 board	Adj. Point/ AU-135 board	Specification
5-ch	TP101 (GND: TPE1)	⊘RV102	9.6±0.1 V
6-ch	TP201 (GND: TPE1)	⊘RV202	

Note: Proceed the next step, maintaining the above settings.

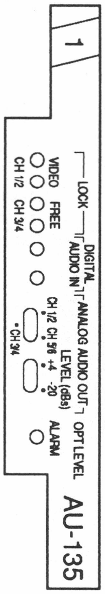
1
LOCK
VIDEO
FREE
CH 1/2
CH 3/4
DIGITAL AUDIO IN
ANALOG AUDIO OUT
CH 1/2
CH 5/6
•CH 3/4
+4
-20
LEVEL (dBs)
OPT LEVEL
ALARM
AU-135

(PANEL SIDE)

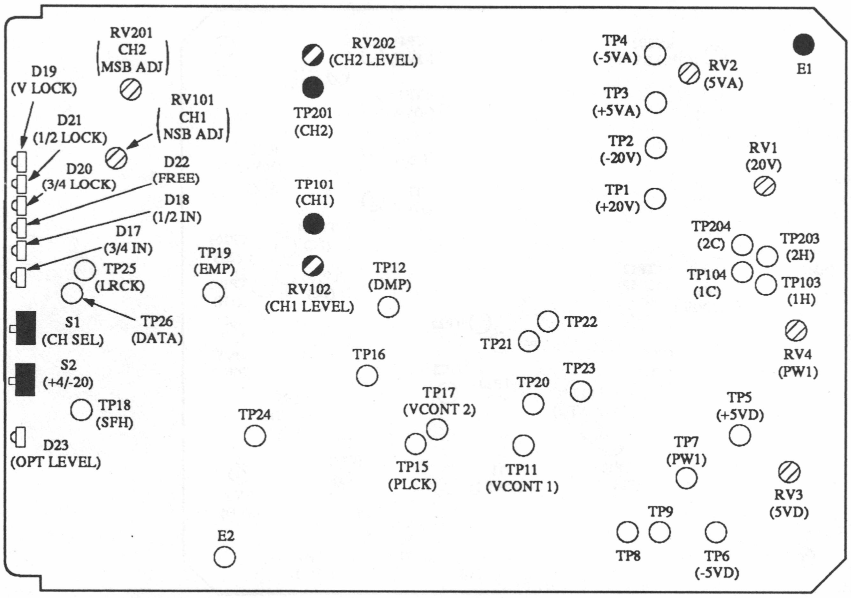
RV201
CH2
MSB ADJ
D19
(V LOCK)
RV101
CH1
NSB ADJ
D21
(1/2 LOCK)
D20
(3/4 LOCK)
D22
(FREE)
D18
(1/2 IN)
D17
(3/4 IN)
TP25
(LRCK)
TP26
(DATA)
S1
(CH SEL)
S2
(+4/-20)
TP18
(SFH)
D23
(OPT LEVEL)
RV202
(CH2 LEVEL)
TP201
(CH2)
TP101
(CH1)
TP19
(EMP)
RV102
(CH1 LEVEL)
TP12
(DMP)
TP24
E2
TP16
TP17
(VCONT 2)
TP15
(PLCK)
TP11
(VCONT 1)
TP21
TP20
TP22
TP23
TP4
(-5VA)
TP3
(+5VA)
TP2
(-20V)
TP1
(+20V)
RV2
(5VA)
E1
RV1
(20V)
TP204
(2C)
TP203
(2H)
TP104
(1C)
TP103
(1H)
RV4
(PW1)
TP5
(+5VD)
TP7
(PW1)
RV3
(5VD)
TP9
TP8
TP6
(-5VD)

AU-135 BOARD (COMPONENT SIDE)

4-2-14. MSB ADJUSTMENT (AU-135 BOARD)

Note:
If the MONITOR OUTPUT terminal is not equipped with the audio analyzer, omit the observation of the waveform.

Equipment: Audio Analyzer

To be extended: AU-135 board

Preparation:

- Put the audio analyzer into the DIST (distortion) mode.
- Connect the input terminal of the oscilloscope with the MONITOR OUTPUT terminal of the audio analyzer.
- 30kHz L.P.F switch/Audio analyzer → ON
- OUTPUT LEVEL switch/Audio analyzer → +4dBs
  (Measured at Zo=600 Ω, Zi=10 kΩ)

Adjustment procedure:

Channel	Adj.point/ AU-135 board	Specification
5-ch	⊘RV101	Adjust so that the distortion ratio is minimum (less than 0.05%) and the waveform at the MONITOR OUTPUT terminal is as follows.
6-ch	⊘RV201	

Waveform at MONITOR OUTPUT terminal

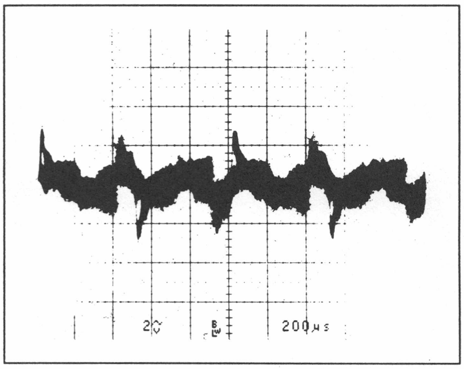

NG

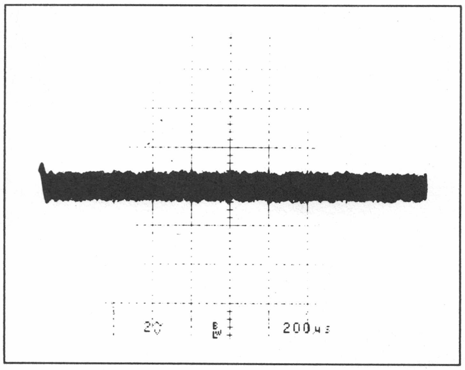

OK

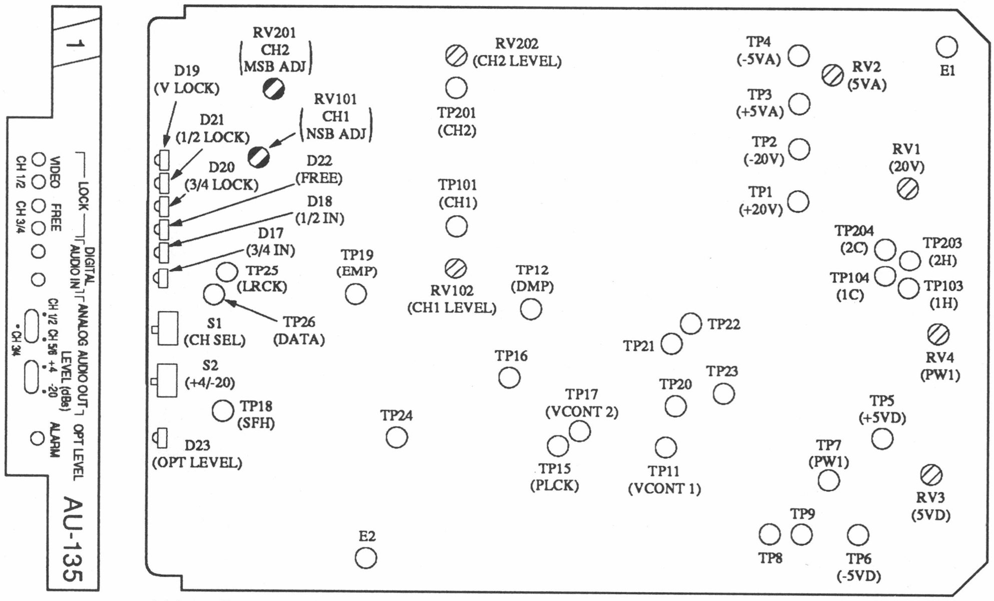
1
LOCK
VIDEO
FREE
CH 1/2
CH 3/4
DIGITAL AUDIO IN
ANALOG AUDIO OUT
LEVEL (dBs)
CH 1/2
CH 5/6
+4
-20
CH 3/4
OPT LEVEL
ALARM
AU-135
RV201 CH2 MSB ADJ
D19 (V LOCK)
RV101 CH1 NSB ADJ
D21 (1/2 LOCK)
D20 (3/4 LOCK)
D22 (FREE)
D18 (1/2 IN)
D17 (3/4 IN)
TP25 (LRCK)
TP26 (DATA)
TP19 (EMP)
S1 (CH SEL)
S2 (+4/-20)
TP18 (SFH)
D23 (OPT LEVEL)
TP24
E2
RV202 (CH2 LEVEL)
TP201 (CH2)
TP101 (CH1)
RV102 (CH1 LEVEL)
TP12 (DMP)
TP16
TP17 (VCONT 2)
TP15 (PLCK)
TP11 (VCONT 1)
TP21
TP22
TP20
TP23
TP4 (-5VA)
TP3 (+5VA)
TP2 (-20V)
TP1 (+20V)
RV2 (5VA)
E1
RV1 (20V)
TP204 (2C)
TP203 (2H)
TP104 (1C)
TP103 (1H)
RV4 (PW1)
TP5 (+5VD)
TP7 (PW1)
RV3 (5VD)
TP9
TP8
TP6 (-5VD)

(PANEL SIDE) AU-135 BOARD (COMPONENT SIDE)

SECTION A
BLOCK DIAGRAMS

OVERALL BLOCK

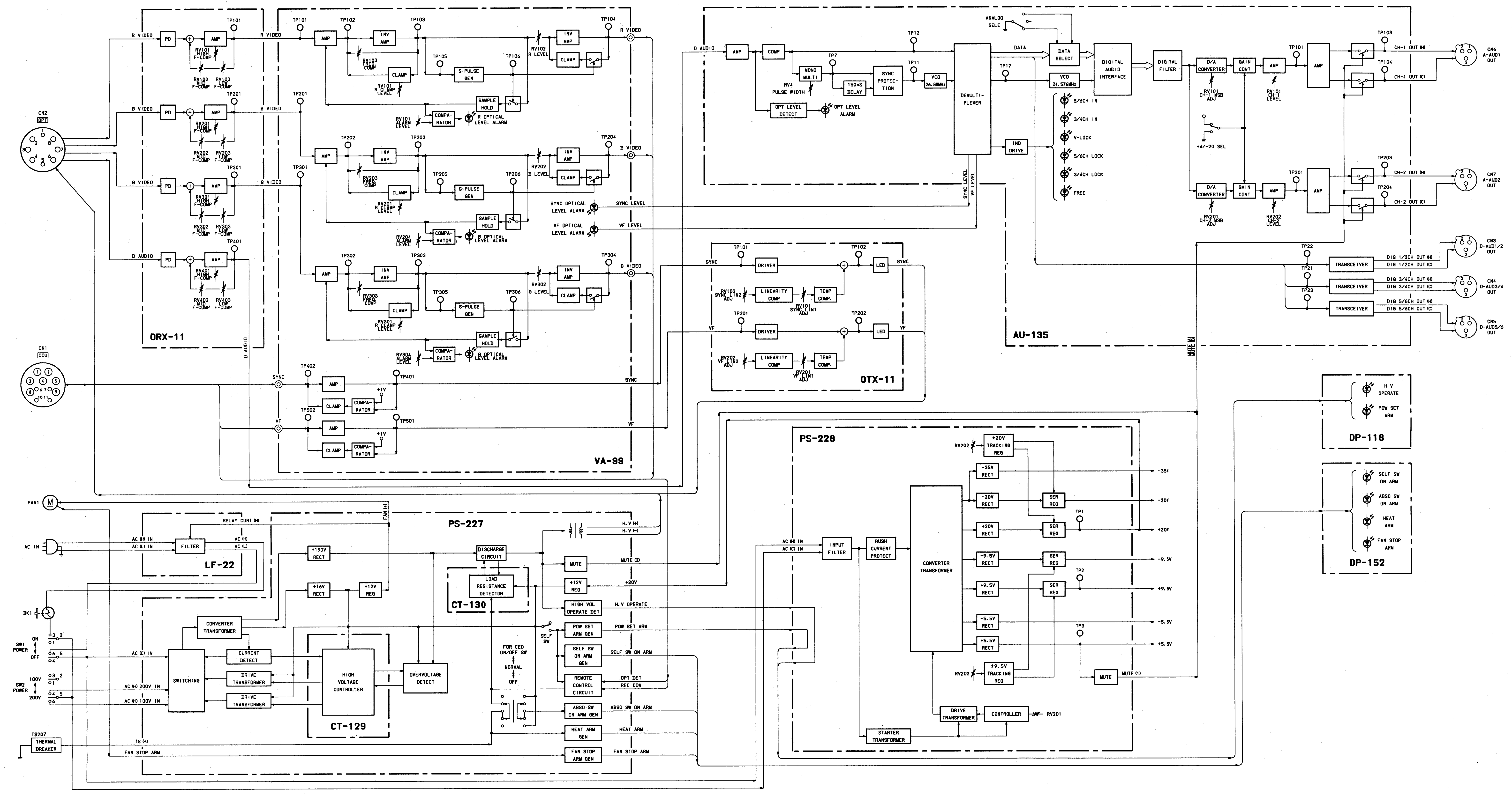
CN2 OPT
CN1 CCU
R VIDEO
B VIDEO
G VIDEO
D AUDIO
PD
AMP
TP101
TP201
TP301
TP401
RV101 HIGH F-COMP
RV102 MID F-COMP
RV103 LOW F-COMP
ORX-11
INV AMP
CLAMP
S-PULSE GEN
SAMPLE HOLD
COMPA-RATOR
R OPTICAL LEVEL ALARM
B OPTICAL LEVEL ALARM
G OPTICAL LEVEL ALARM
R LEVEL
B LEVEL
G LEVEL
SYNC OPTICAL LEVEL ALARM
VF OPTICAL LEVEL ALARM
SYNC LEVEL
VF LEVEL
SYNC
VF
VA-99
COMP
MONO MULTI
RV4 PULSE WIDTH
150nS DELAY
SYNC PROTEC-TION
VCO 24.576MHz
OPT LEVEL DETECT
OPT LEVEL ALARM
DEMULTI-PLEXER
IND DRIVE
ANALOG SELE
DATA SELECT
DIGITAL AUDIO INTERFACE
DIGITAL FILTER
D/A CONVERTER
GAIN CONT
5/6CH IN
3/4CH IN
V-LOCK
5/6CH LOCK
3/4CH LOCK
FREE
+4/-20 SEL
CH-1 OUT (H)
CH-1 OUT (C)
CH-2 OUT (H)
CH-2 OUT (C)
CN6 A-AUD1 OUT
CN7 A-AUD2 OUT
TRANSCEIVER
DIG 1/2CH OUT (H)
DIG 1/2CH OUT (C)
DIG 3/4CH OUT (H)
DIG 3/4CH OUT (C)
DIG 5/6CH OUT (H)
DIG 5/6CH OUT (C)
CN3 D-AUD1/2 OUT
CN4 D-AUD3/4 OUT
CN5 D-AUD5/6 OUT
AU-135
DRIVER
LED
LINEARITY COMP
TEMP COMP.
OTX-11
H.V OPERATE
POW SET ARM
DP-118
SELF SW ON ARM
ABSO SW ON ARM
HEAT ARM
FAN STOP ARM
DP-152
FAN1
AC IN
FILTER
RELAY CONT (H)
LF-22
BK1
SW1 POWER ON OFF
SW2 POWER 100V 200V
TS207 THERMAL BREAKER
SWITCHING
CONVERTER TRANSFORMER
CURRENT DETECT
DRIVE TRANSFORMER
+190V RECT
+16V RECT
+12V REG
HIGH VOLTAGE CONTROLLER
CT-129
OVERVOLTAGE DETECT
DISCHARGE CIRCUIT
LOAD RESISTANCE DETECTOR
CT-130
PS-227
MUTE
+12V REG
HIGH VOL OPERATE DET
POW SET ARM GEN
SELF SW ON ARM GEN
REMOTE CONTROL CIRCUIT
ABSO SW ON ARM GEN
HEAT ARM GEN
FAN STOP ARM GEN
FOR CED ON/OFF SW NORMAL OFF
SELF SW
H.V (+)
H.V (-)
PS-228
INPUT FILTER
RUSH CURRENT PROTECT
CONVERTER TRANSFORMER
+20V TRACKING REG
-35V RECT
-20V RECT
+20V RECT
-9.5V RECT
+9.5V RECT
-5.5V RECT
+5.5V RECT
SER REG
±9.5V TRACKING REG
DRIVE TRANSFORMER
CONTROLLER
STARTER TRANSFORMER
-35V
-20V
+20V
-9.5V
+9.5V
-5.5V
+5.5V
MUTE (1)

OVERALL BLOCK
HDFR-300

ORX-11 BLOCK
VA-99 BLOCK

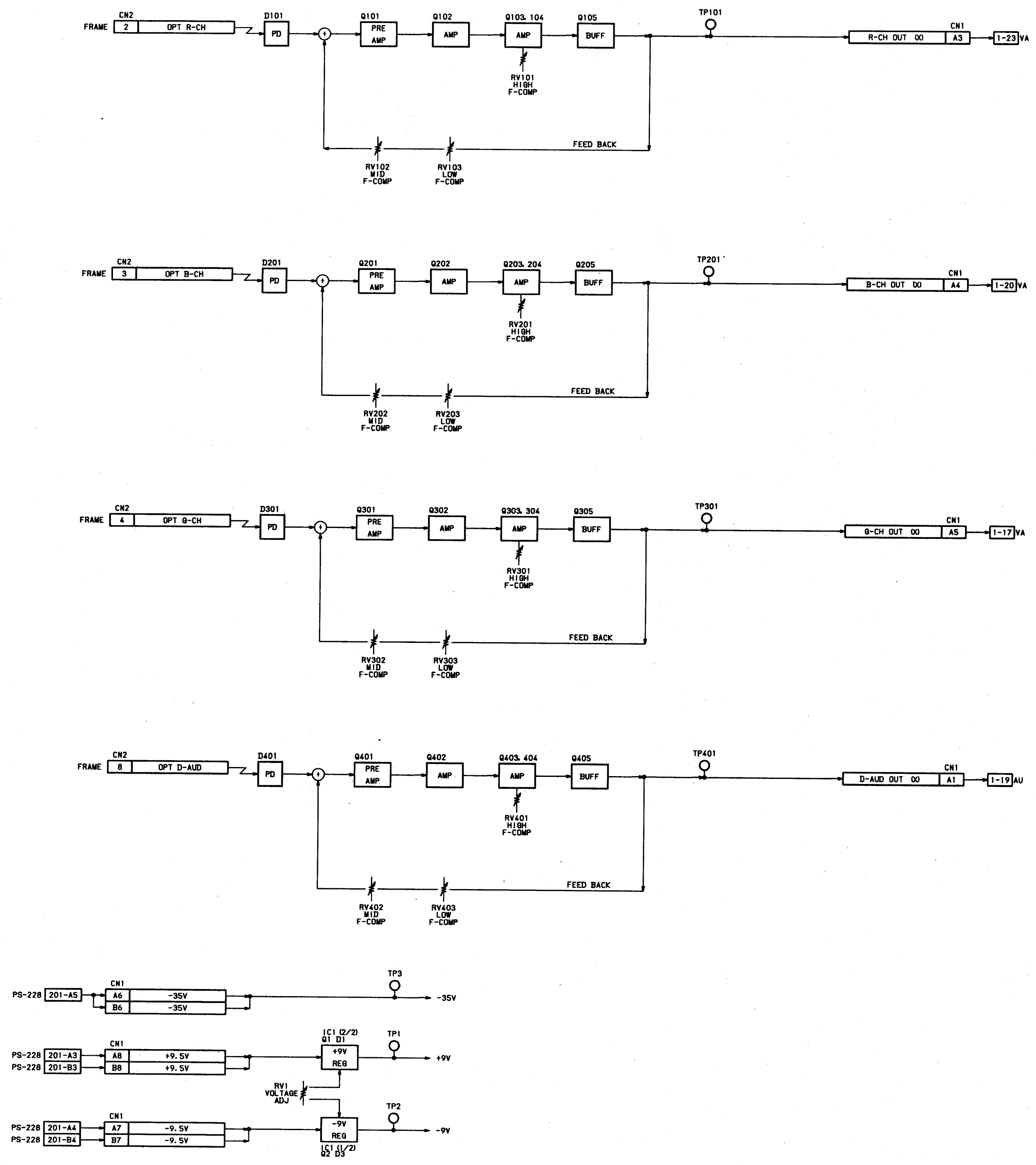
FRAME
CN2
2
OPT R-CH
D101
PD
Q101
PRE AMP
Q102
AMP
Q103, 104
AMP
RV101 HIGH F-COMP
Q105
BUFF
TP101
R-CH OUT (X)
CN1
A3
1-23 VA
RV102 MID F-COMP
RV103 LOW F-COMP
FEED BACK
FRAME
CN2
3
OPT B-CH
D201
PD
Q201
PRE AMP
Q202
AMP
Q203, 204
AMP
RV201 HIGH F-COMP
Q205
BUFF
TP201
B-CH OUT (X)
CN1
A4
1-20 VA
RV202 MID F-COMP
RV203 LOW F-COMP
FEED BACK
FRAME
CN2
4
OPT G-CH
D301
PD
Q301
PRE AMP
Q302
AMP
Q303, 304
AMP
RV301 HIGH F-COMP
Q305
BUFF
TP301
G-CH OUT (X)
CN1
A5
1-17 VA
RV302 MID F-COMP
RV303 LOW F-COMP
FEED BACK
FRAME
CN2
8
OPT D-AUD
D401
PD
Q401
PRE AMP
Q402
AMP
Q403, 404
AMP
RV401 HIGH F-COMP
Q405
BUFF
TP401
D-AUD OUT (X)
CN1
A1
1-19 AU
RV402 MID F-COMP
RV403 LOW F-COMP
FEED BACK
PS-228 201-A5
CN1
A6 -35V
B6 -35V
TP3
-35V
PS-228 201-A3
PS-228 201-B3
CN1
A8 +9.5V
B8 +9.5V
IC1 (2/2) Q1 D1
+9V REG
TP1
+9V
RV1 VOLTAGE ADJ
PS-228 201-A4
PS-228 201-B4
CN1
A7 -9.5V
B7 -9.5V
-9V REG
IC1 (1/2) Q2 D3
TP2
-9V

ORX-11 BLOCK
HDFR-300

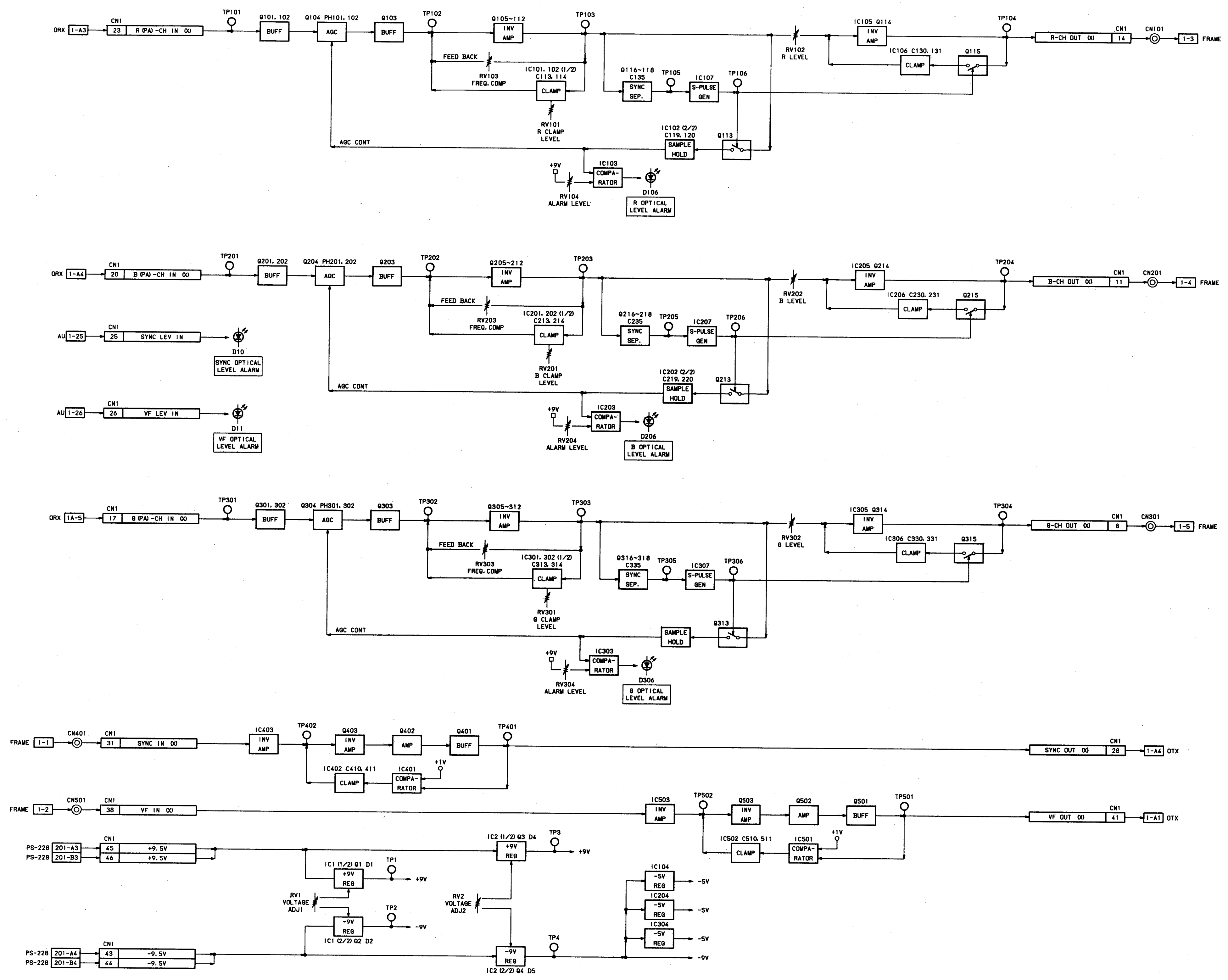
ORX 1-A3
CN1
23
R (PA) -CH IN (X)
TP101
Q101, 102
BUFF
Q104 PH101, 102
AGC
Q103
BUFF
TP102
Q105~112
INV AMP
TP103
FEED BACK
RV103 FREQ. COMP
IC101, 102 (1/2) C113, 114
CLAMP
RV101 R CLAMP LEVEL
AGC CONT
Q116~118 C135
SYNC SEP.
TP105
IC107
S-PULSE GEN
TP106
IC102 (2/2) C119, 120
SAMPLE HOLD
Q113
+9V
RV104 ALARM LEVEL
IC103
COMPA-RATOR
D106
R OPTICAL LEVEL ALARM
RV102 R LEVEL
IC105 Q114
INV AMP
IC106 C130, 131
CLAMP
Q115
TP104
R-CH OUT (X)
CN1
14
CN101
1-3 FRAME
ORX 1-A4
CN1
20
B (PA) -CH IN (X)
TP201
Q201, 202
BUFF
Q204 PH201, 202
AGC
Q203
BUFF
TP202
Q205~212
INV AMP
TP203
FEED BACK
RV203 FREQ. COMP
IC201, 202 (1/2) C213, 214
CLAMP
RV201 B CLAMP LEVEL
AGC CONT
Q216~218 C235
SYNC SEP.
TP205
IC207
S-PULSE GEN
TP206
IC202 (2/2) C219, 220
SAMPLE HOLD
Q213
+9V
RV204 ALARM LEVEL
IC203
COMPA-RATOR
D206
B OPTICAL LEVEL ALARM
RV202 B LEVEL
IC205 Q214
INV AMP
IC206 C230, 231
CLAMP
Q215
TP204
B-CH OUT (X)
CN1
11
CN201
1-4 FRAME
AU 1-25
CN1
25
SYNC LEV IN
D10
SYNC OPTICAL LEVEL ALARM
AU 1-26
CN1
26
VF LEV IN
D11
VF OPTICAL LEVEL ALARM
ORX 1A-5
CN1
17
G (PA) -CH IN (X)
TP301
Q301, 302
BUFF
Q304 PH301, 302
AGC
Q303
BUFF
TP302
Q305~312
INV AMP
TP303
FEED BACK
RV303 FREQ. COMP
IC301, 302 (1/2) C313, 314
CLAMP
RV301 G CLAMP LEVEL
AGC CONT
Q316~318 C335
SYNC SEP.
TP305
IC307
S-PULSE GEN
TP306
SAMPLE HOLD
Q313
+9V
RV304 ALARM LEVEL
IC303
COMPA-RATOR
D306
G OPTICAL LEVEL ALARM
RV302 G LEVEL
IC305 Q314
INV AMP
IC306 C330, 331
CLAMP
Q315
TP304
G-CH OUT (X)
CN1
8
CN301
1-5 FRAME
FRAME 1-1
CN401
CN1
31
SYNC IN (X)
IC403
INV AMP
TP402
Q403
INV AMP
Q402
AMP
Q401
BUFF
TP401
IC402 C410, 411
CLAMP
IC401
COMPA-RATOR
+1V
SYNC OUT (X)
CN1
28
1-A4 OTX
FRAME 1-2
CN501
CN1
38
VF IN (X)
IC503
INV AMP
TP502
Q503
INV AMP
Q502
AMP
Q501
BUFF
TP501
IC502 C510, 511
CLAMP
IC501
COMPA-RATOR
+1V
VF OUT (X)
CN1
41
1-A1 OTX
PS-228 201-A3
PS-228 201-B3
CN1
45 +9.5V
46 +9.5V
IC1 (1/2) Q1 D1
+9V REG
TP1
+9V
RV1 VOLTAGE ADJ1
-9V REG
IC1 (2/2) Q2 D2
TP2
-9V
IC2 (1/2) Q3 D4
+9V REG
TP3
+9V
RV2 VOLTAGE ADJ2
-9V REG
IC2 (2/2) Q4 D5
TP4
IC104
-5V REG
-5V
IC204
-5V REG
-5V
IC304
-5V REG
-5V
-9V
PS-228 201-A4
PS-228 201-B4
CN1
43 -9.5V
44 -9.5V

VA-99 BLOCK
HDFR-300

AU-135 BLOCK

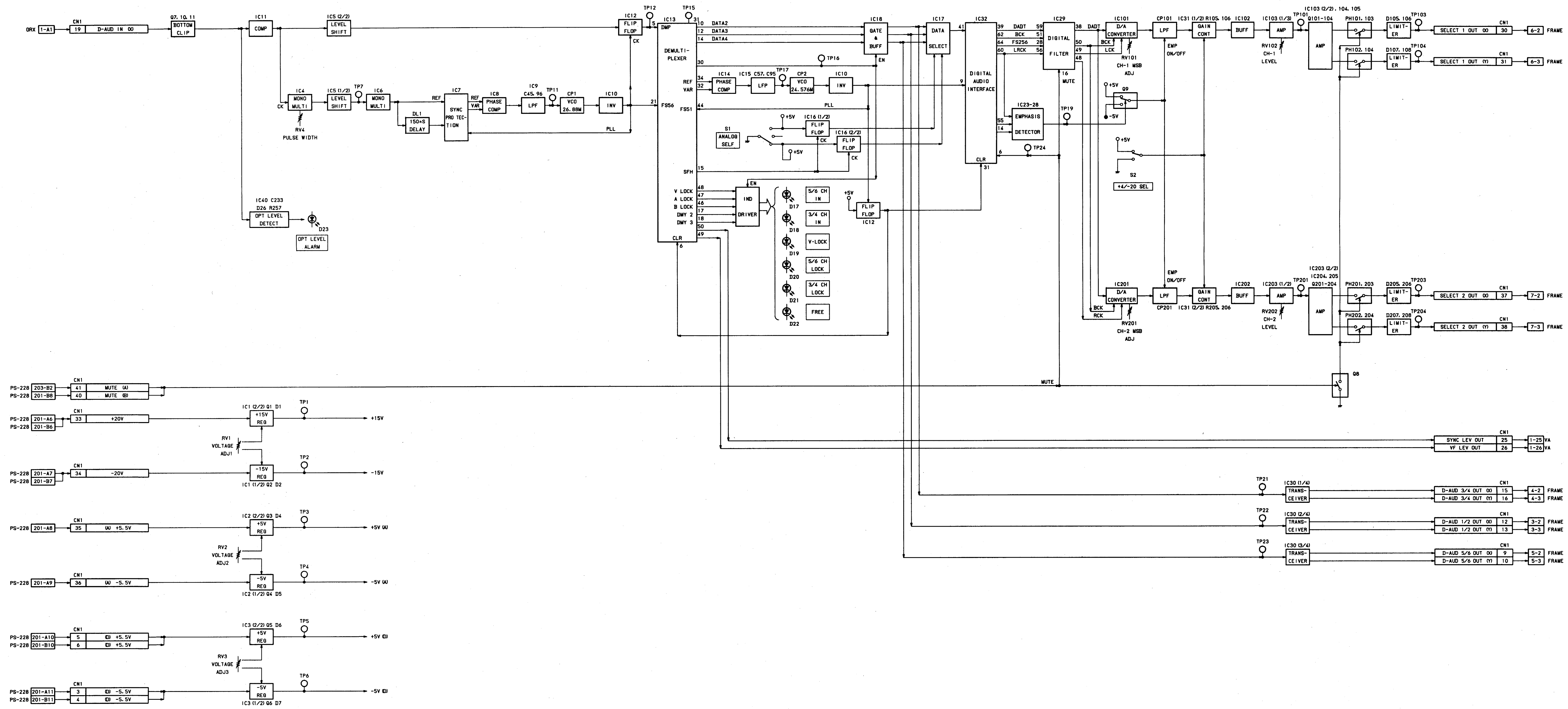
ORX
1-A1
CN1
19
D-AUD IN (X)
Q7, 10, 11
BOTTOM CLIP
IC11
COMP
IC5 (2/2)
LEVEL SHIFT
IC12
FLIP FLOP
CK
TP12
TP15
IC13
DMP
DEMULTI-PLEXER
DATA2
DATA3
DATA4
REF
VAR
FS56
FS51
SFH
V LOCK
A LOCK
B LOCK
DMY 2
DMY 3
CLR
IC4
MONO MULTI
RV4
PULSE WIDTH
IC5 (1/2)
LEVEL SHIFT
TP7
IC6
MONO MULTI
DL1
150nS DELAY
IC7
SYNC PRO TEC-TION
IC8
PHASE COMP
IC9
C45, 96
LPF
TP11
CP1
VCO 26.88M
IC10
INV
PLL
IC40 C233
D26 R257
OPT LEVEL DETECT
D23
OPT LEVEL ALARM
IC14
PHASE COMP
IC15 C57, C95
LFP
TP17
CP2
VCO 24.576M
IC10
INV
TP16
S1
ANALOG SELF
+5V
IC16 (1/2)
FLIP FLOP
IC16 (2/2)
FLIP FLOP
EN
IND DRIVER
D17
5/6 CH IN
D18
3/4 CH IN
D19
V-LOCK
D20
5/6 CH LOCK
D21
3/4 CH LOCK
D22
FREE
FLIP FLOP
IC12
IC18
GATE & BUFF
IC17
DATA SELECT
IC32
DIGITAL AUDIO INTERFACE
DADT
BCK
FS256
LRCK
IC29
DIGITAL FILTER
MUTE
IC23-28
EMPHASIS DETECTOR
TP19
TP24
IC101
D/A CONVERTER
LCK
RV101
CH-1 MSB ADJ
Q9
-5V
S2
+4/-20 SEL
CP101
LPF
EMP ON/OFF
IC31 (1/2) R105, 106
GAIN CONT
IC102
BUFF
IC103 (1/3)
AMP
RV102
CH-1 LEVEL
TP101
IC103 (2/2), 104, 105
Q101-104
AMP
PH101, 103
PH102, 104
D105, 106
D107, 108
LIMIT-ER
TP103
TP104
SELECT 1 OUT (X)
SELECT 1 OUT (Y)
6-2
6-3
FRAME
IC201
D/A CONVERTER
RCK
RV201
CH-2 MSB ADJ
CP201
IC31 (2/2) R205, 206
IC202
IC203 (1/2)
RV202
CH-2 LEVEL
TP201
IC203 (2/2)
IC204, 205
Q201-204
PH201, 203
PH202, 204
D205, 206
D207, 208
TP203
TP204
SELECT 2 OUT (X)
SELECT 2 OUT (Y)
37
38
7-2
7-3
Q8
PS-228
203-B2
201-B8
MUTE (A)
MUTE (B)
201-A6
201-B6
+20V
IC1 (2/2) Q1 D1
+15V REG
TP1
+15V
RV1
VOLTAGE ADJ1
201-A7
201-B7
-20V
-15V REG
IC1 (1/2) Q2 D2
TP2
-15V
201-A8
(A) +5.5V
IC2 (2/2) Q3 D4
+5V REG
TP3
+5V (A)
RV2
VOLTAGE ADJ2
201-A9
(A) -5.5V
-5V REG
IC2 (1/2) Q4 D5
TP4
-5V (A)
201-A10
201-B10
(D) +5.5V
IC3 (2/2) Q5 D6
TP5
+5V (D)
RV3
VOLTAGE ADJ3
201-A11
201-B11
(D) -5.5V
IC3 (1/2) Q6 D7
TP6
-5V (D)
SYNC LEV OUT
VF LEV OUT
1-25 VA
1-26 VA
TP21
IC30 (1/4)
TRANS-CEIVER
D-AUD 3/4 OUT (X)
D-AUD 3/4 OUT (Y)
4-2
4-3
TP22
IC30 (2/4)
D-AUD 1/2 OUT (X)
D-AUD 1/2 OUT (Y)
3-2
3-3
TP23
IC30 (3/4)
D-AUD 5/6 OUT (X)
D-AUD 5/6 OUT (Y)
5-2
5-3

AU-135 BLOCK
HDFR-300

OTX-11 BLOCK
PS-227 BLOCK
CT-129/130 BLOCK
LF-22 BLOCK

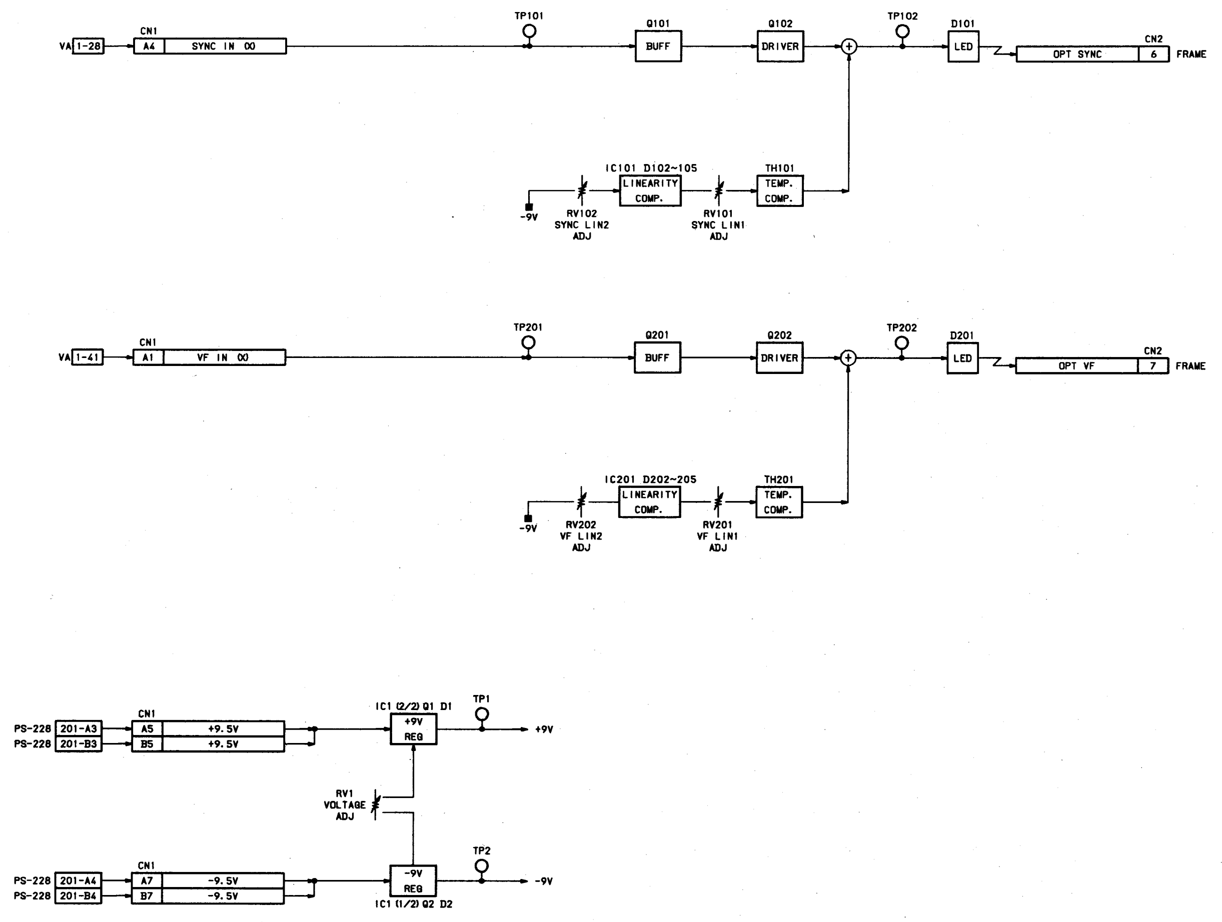
VA 1-28
CN1
A4
SYNC IN (X)
TP101
Q101
BUFF
Q102
DRIVER
TP102
D101
LED
OPT SYNC
CN2
6
FRAME
IC101 D102~105
LINEARITY COMP.
TH101
TEMP. COMP.
-9V
RV102 SYNC LIN2 ADJ
RV101 SYNC LIN1 ADJ
VA 1-41
CN1
A1
VF IN (X)
TP201
Q201
BUFF
Q202
DRIVER
TP202
D201
LED
OPT VF
CN2
7
FRAME
IC201 D202~205
LINEARITY COMP.
TH201
TEMP. COMP.
-9V
RV202 VF LIN2 ADJ
RV201 VF LIN1 ADJ
PS-228 201-A3
PS-228 201-B3
CN1
A5 +9.5V
B5 +9.5V
IC1 (2/2) Q1 D1
+9V REG
TP1
+9V
RV1 VOLTAGE ADJ
PS-228 201-A4
PS-228 201-B4
CN1
A7 -9.5V
B7 -9.5V
-9V REG
IC1 (1/2) Q2 D2
TP2
-9V

OTX-11 BLOCK
HDFR-300

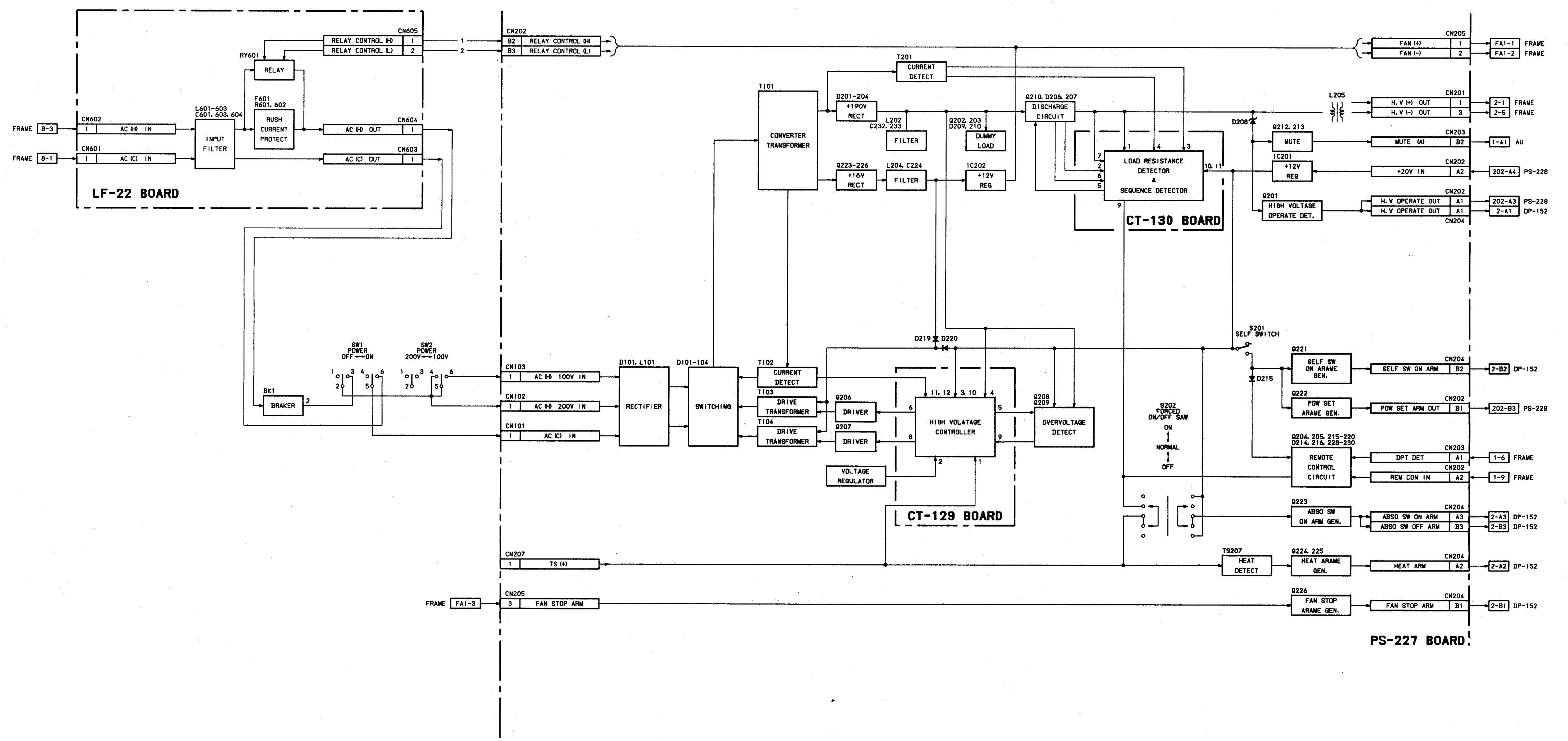
LF-22 BOARD
FRAME 8-3
CN602
1
AC (H) IN
FRAME 8-1
CN601
1
AC (C) IN
L601-603
C601, 603, 604
INPUT FILTER
RY601
RELAY
F601
R601, 602
RUSH CURRENT PROTECT
CN605
RELAY CONTROL (H) 1
RELAY CONTROL (L) 2
CN604
AC (H) OUT 1
CN603
AC (C) OUT 1
1
2
BK1
BRAKER
2
SW1 POWER OFF ←→ ON
SW2 POWER 200V ←→ 100V
1 2 3 4 5 6
CN202
B2 RELAY CONTROL (H)
B3 RELAY CONTROL (L)
CN103
1 AC (H) 100V IN
CN102
1 AC (H) 200V IN
CN101
1 AC (C) IN
D101, L101
RECTIFIER
D101-104
SWITCHING
T101
CONVERTER TRANSFORMER
T201
CURRENT DETECT
D201-204
+190V RECT
L202
C232, 233
FILTER
Q202, 203
D209, 210
DUMMY LOAD
Q223-226
+16V RECT
L204, C224
FILTER
IC202
+12V REG
Q210, D206, 207
DISCHARGE CIRCUIT
LOAD RESISTANCE DETECTOR & SEQUENCE DETECTOR
1 4 3 7 2 6 5 9 10, 11
CT-130 BOARD
D208
Q212, 213
MUTE
IC201
+12V REG
Q201
HIGH VOLTAGE OPERATE DET.
L205
CN205
FAN (+) 1
FAN (-) 2
FA1-1 FRAME
FA1-2 FRAME
CN201
H.V (+) OUT 1
H.V (-) OUT 3
2-1 FRAME
2-5 FRAME
CN203
MUTE (A) B2
1-41 AU
CN202
+20V IN A2
202-A4 PS-228
CN202
H.V OPERATE OUT A1
H.V OPERATE OUT A1
CN204
202-A3 PS-228
2-A1 DP-152
T102
CURRENT DETECT
T103
DRIVE TRANSFORMER
T104
DRIVE TRANSFORMER
Q206
DRIVER
Q207
DRIVER
VOLTAGE REGULATOR
D219 D220
11, 12
3, 10
4
6
8
5
9
2
1
HIGH VOLATAGE CONTROLLER
CT-129 BOARD
Q208
Q209
OVERVOLTAGE DETECT
S201 SELF SWITCH
D215
S202 FORCED ON/OFF SAW
ON
NORMAL
OFF
Q221
SELF SW ON ARAME GEN.
CN204
SELF SW ON ARM B2
2-B2 DP-152
Q222
POW SET ARAME GEN.
CN202
POW SET ARM OUT B1
202-B3 PS-228
Q204, 205, 215-220
D214, 216, 228-230
REMOTE CONTROL CIRCUIT
CN203
DPT DET A1
1-6 FRAME
CN202
REM CON IN A2
1-9 FRAME
Q223
ABSO SW ON ARM GEN.
CN204
ABSO SW ON ARM A3
ABSO SW OFF ARM B3
2-A3 DP-152
2-B3 DP-152
CN207
1 TS (+)
TS207
HEAT DETECT
Q224, 225
HEAT ARAME GEN.
CN204
HEAT ARM A2
2-A2 DP-152
FRAME FA1-3
CN205
3 FAN STOP ARM
Q226
FAN STOP ARAME GEN.
CN204
FAN STOP ARM B1
2-B1 DP-152
PS-227 BOARD

PS-227 BLOCK
CT-129 BLOCK
CT-130 BLOCK
LF-22 BLOCK
HDFR-300

PS-228 BLOCK

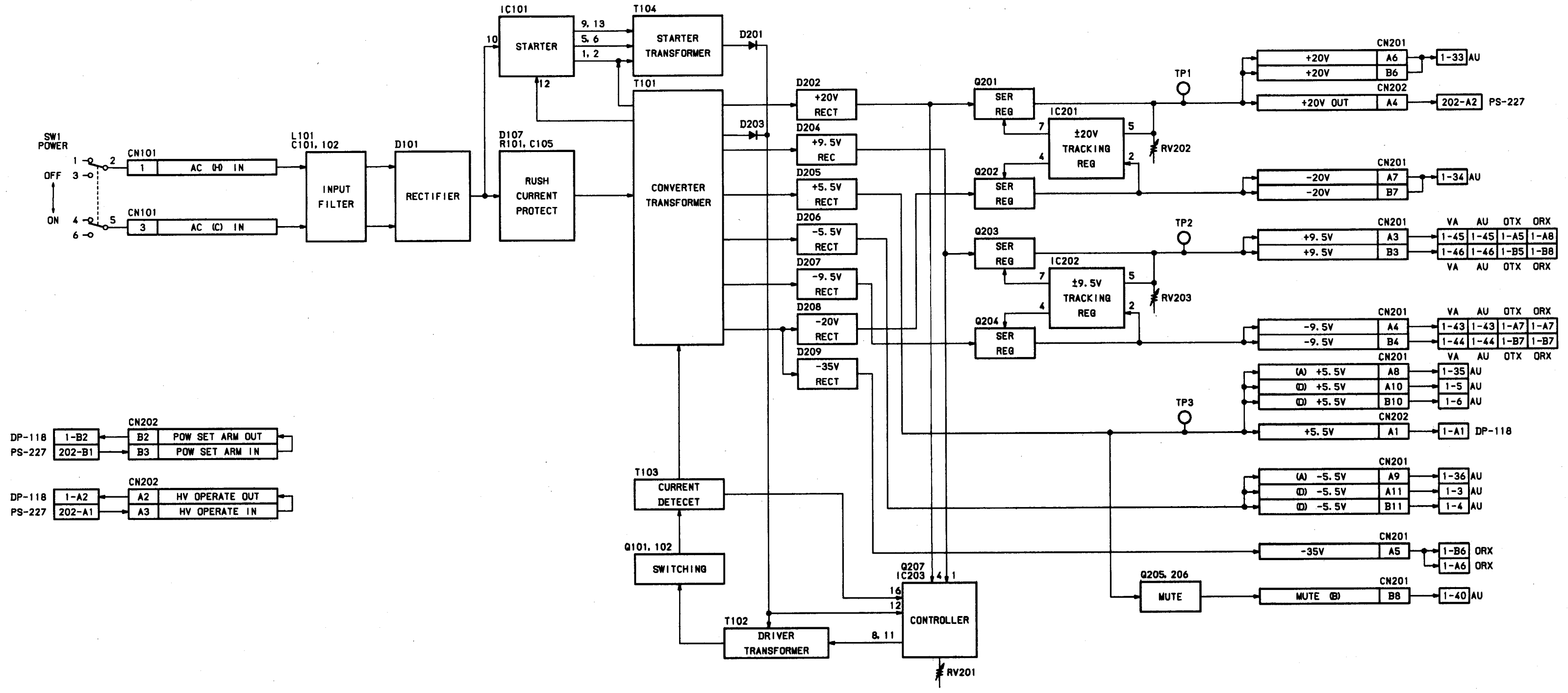
SW1
POWER
OFF
ON
1
2
3
4
5
6
CN101
1
AC (H) IN
CN101
3
AC (C) IN
L101
C101, 102
INPUT
FILTER
D101
RECTIFIER
IC101
STARTER
10
12
9, 13
5, 6
1, 2
T104
STARTER
TRANSFORMER
D107
R101, C105
RUSH
CURRENT
PROTECT
T101
CONVERTER
TRANSFORMER
D201
D203
D202
+20V
RECT
D204
+9.5V
REC
D205
+5.5V
RECT
D206
-5.5V
RECT
D207
-9.5V
RECT
D208
-20V
RECT
D209
-35V
RECT
Q201
SER
REG
IC201
±20V
TRACKING
REG
7
4
5
2
RV202
Q202
SER
REG
Q203
SER
REG
IC202
±9.5V
TRACKING
REG
7
4
5
2
RV203
Q204
SER
REG
TP1
TP2
TP3
CN201
+20V A6
+20V B6
1-33 AU
CN202
+20V OUT A4
202-A2 PS-227
CN201
-20V A7
-20V B7
1-34 AU
CN201
+9.5V A3
+9.5V B3
VA AU OTX ORX
1-45 1-45 1-A5 1-A8
1-46 1-46 1-B5 1-B8
VA AU OTX ORX
CN201
-9.5V A4
-9.5V B4
VA AU OTX ORX
1-43 1-43 1-A7 1-A7
1-44 1-44 1-B7 1-B7
VA AU OTX ORX
CN201
(A) +5.5V A8
(D) +5.5V A10
(D) +5.5V B10
1-35 AU
1-5 AU
1-6 AU
CN202
+5.5V A1
1-A1 DP-118
CN201
(A) -5.5V A9
(D) -5.5V A11
(D) -5.5V B11
1-36 AU
1-3 AU
1-4 AU
CN201
-35V A5
1-B6 ORX
1-A6 ORX
Q205, 206
MUTE
CN201
MUTE (B) B8
1-40 AU
T103
CURRENT
DETECET
Q101, 102
SWITCHING
T102
DRIVER
TRANSFORMER
Q207
IC203
4
1
16
12
8, 11
CONTROLLER
RV201
DP-118 1-B2
PS-227 202-B1
CN202
B2 POW SET ARM OUT
B3 POW SET ARM IN
DP-118 1-A2
PS-227 202-A1
CN202
A2 HV OPERATE OUT
A3 HV OPERATE IN

PS-228 BLOCK

HDFR-300

SECTION B
SEMICONDUCTOR

The circuit diagram of IC is obtained from the IC data book published by the manufacturer.

TYPE	PAGE
11EQS10	B-2
1S1555	B-2
1SS119	B-2
1SS123	B-2
1SS226	B-2
1SZ46A	B-2
1T34	B-2
2SA1162	B-2
2SA1226	B-2
2SA1283	B-2
2SA1441	B-2
2SA1462	B-2
2SA1469	B-2
2SA812	B-2
2SB733	B-2
2SB734	B-2
2SC1252	B-2
2SC1622A	B-2
2SC1623	B-2
2SC2688	B-2
2SC2712	B-2
2SC2714	B-2
2SC2733	B-2
2SC2758	B-2
2SC2785	B-2
2SC3243	B-2
2SC3460	B-2
2SD773	B-2
2SD774	B-2
3SK163	B-2
5P6M	B-2
AM26LS31CNS	B-3
AM26LS32ACNS	B-3
AQV203A	B-3
CX23065A	B-3
DTA114ES	B-2
DTC114ES	B-2
ERA22-06	B-2
ERA84-009	B-2
ERB44- ? ?	B-2
ESAD92M-02	B-2
FMB-29L	B-2
HSM88AS	B-2
LM358PS	B-3
M5237L	B-3
MBM27C64-30	B-3
MC14011BCP	B-3
MC14013BF	B-4
MC14052BF	B-4
MC14528BF	B-4
MC14584BCP	B-4
MC74HC4049F	B-4
MC74HC4050F	B-4
MC79L ? ? ACP	B-4
NJM5534M	B-5
PCM78P-J-1	B-5
RD ? ? ESB ?	B-2
RD ? ? ESL ?	B-2
RD ? ? M-B ?	B-2
RU3AM	B-2
SN74HC00NS	B-5
SN74HC04NS	B-5
SN74HC08NS	B-5
SN74HC161NS	B-5
SN74HC163NS	B-6
SN74HC164NS	B-6
SN74HC174NS	B-6
SN74HC175NS	B-6
SN74HC32NS	B-6
SN74HC374NS	B-6
SN74HC74NS	B-7
SN74LS624NS	B-7
SSM2016P	B-7
TC74AC153F	B-7
TC74AC163F	B-6
TC74HC4049F	B-4
TC74HC4050AF	B-4
TC74HC4538AF	B-7
TDA1535	B-8
TL062CPS	B-8
TL1451ACN	B-8
TL431CLP	B-8
TL7705ACPS	B-8
TLC27M2CPS	B-8
TLG124A	B-2
TLGC135AP	B-2
TLP621	B-2
uPC311G2	B-8
uPC319G2	B-8
uPC339C	B-8
uPD4011BC	B-3

DIODE, TRANSISTOR

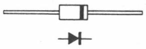

11EQS10
1S1555
1SS119
ERA22-06
ERA84-009
ERB44- ? ?
RU3AM

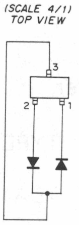
(SCALE 4/1)
TOP VIEW
3
2
1

1SS123
1SS226
HSM88AS

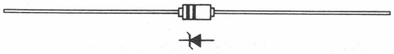

1SZ46A

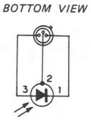
BOTTOM VIEW
3
2
1

1T34

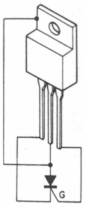

5P6M

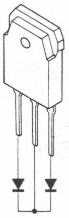

ESAD92M-02

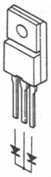

FMB-29L

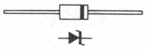

RD ? ?ESB ?
RD ? ?ESL ?

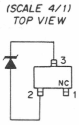
(SCALE 4/1)
TOP VIEW
3
NC
2
1

RD ? ?M-B ?

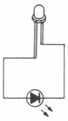

TLG124A ; GREEN
TLGC135AP ; GREEN

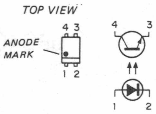
TOP VIEW
4 3
ANODE MARK
1 2
4
3
1
2

TLP621

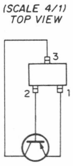
(SCALE 4/1)
TOP VIEW
3
2
1

2SA1162
2SA1226
2SA1462
2SA812

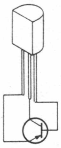

2SA1283

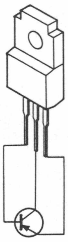

2SA1441

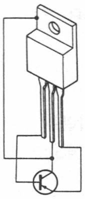

2SA1469

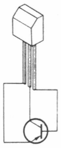

2SB733
2SB734

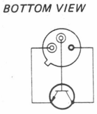
BOTTOM VIEW

2SC1252

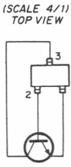
(SCALE 4/1)
TOP VIEW
3
2
1

2SC1622A
2SC1623
2SC2712
2SC2714
2SC2733
2SC2758

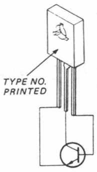
TYPE NO. PRINTED

2SC2688

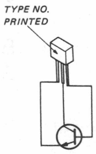
TYPE NO. PRINTED

2SC2785

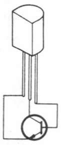

2SC3243

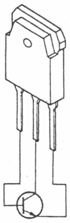

2SC3460

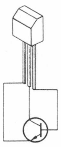

2SD773
2SD774

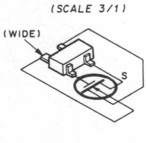
(SCALE 3/1)
(WIDE)
S

3SK163

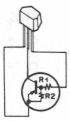

DTA114ES (R1 = 10K, R2 = 10K)

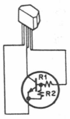

DTC114ES (R1 = 10K, R2 = 10K)

AM26LS31CNS (TI) FLAT PACKAGE

HIGH SPEED DIFFERENTIAL LINE DRIVER
– TOP VIEW –

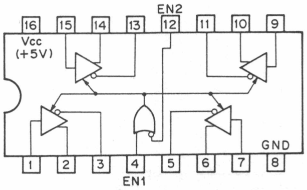
EN2
16
15
14
13
12
11
10
9
Vcc
(+5V)
GND
1
2
3
4
5
6
7
8
EN1

FUNCTION TABLE

EN2	EN1	OUTPUT
0	0	ENABLE
0	1	ENABLE
1	0	HI-Z
1	1	ENABLE

0 ; LOW LEVEL
1 ; HIGH LEVEL
HI-Z ; HIGH IMPEDANCE

AM26LS32ACNS (TI) FLAT PACKAGE

HIGH SPEED DIFFERENTIAL LINE RECEIVER
– TOP VIEW –

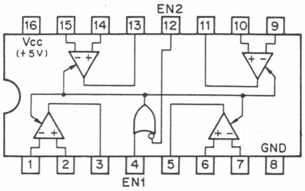
EN2
16
15
14
13
12
11
10
9
Vcc
(+5V)
GND
1
2
3
4
5
6
7
8
EN1

FUNCTION TABLE

EN2	EN1	OUTPUT
0	0	ENABLE
0	1	ENABLE
1	0	HI-Z
1	1	ENABLE

0; LOW LEVEL
1; HIGH LEVEL
HI-Z ; HIGH IMPEDANCE

	SENSE	INPUT VOLT
LS32	±200mV	±7V
LS33	±500mV	±15V

AQV203A (MATSUSHITA) FLAT PACKAGE

PHOTO MOS RELAY
– TOP VIEW –

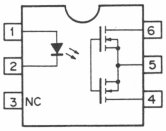

CX23065A (SONY)

N-MOS PHASE COMPARATOR WITH INVERSION AMPLIFIER
– PRINTED SIDE VIEW –

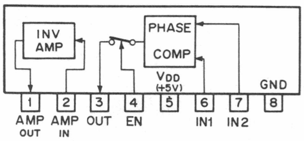
INV
AMP
PHASE
COMP
VDD
(+5V)
GND
1
2
3
4
5
6
7
8
AMP
OUT
AMP
IN
OUT
EN
IN1
IN2

EN	OUT
1	ACTIVE
0	HIGH IMPEDANCE

1; HIGH LEVEL
0; LOW LEVEL

TIMING CHART

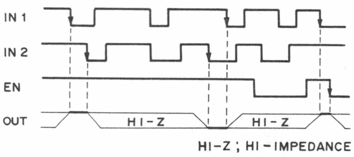

HI-Z ; HI-IMPEDANCE

LM358PS (TI) FLAT PACKAGE

DUAL OPERATIONAL AMPLIFIERS
– TOP VIEW –

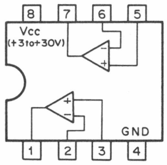
8
7
6
5
Vcc
(+3to+30V)
GND
1
2
3
4

M5237L (MITSUBISHI)

ADJUSTABLE VOLTAGE REGULATOR

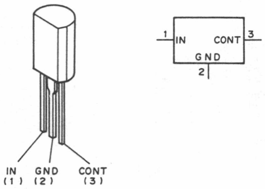
1
IN
CONT
3
GND
2
IN
(1)
GND
(2)
CONT
(3)

MBM27C64-30 (FUJITSU) (ACCESS TIME = 300nS)

C-MOS 64K (8K-8) ERASABLE PROM WITH 3-STATE OUTPUTS
– TOP VIEW –

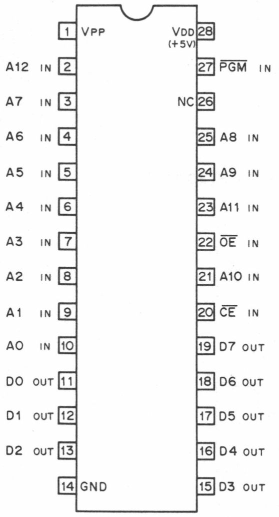
1 VPP
A12 IN 2
A7 IN 3
A6 IN 4
A5 IN 5
A4 IN 6
A3 IN 7
A2 IN 8
A1 IN 9
A0 IN 10
D0 OUT 11
D1 OUT 12
D2 OUT 13
14 GND
VDD (+5V) 28
27 PGM IN
NC 26
25 A8 IN
24 A9 IN
23 A11 IN
22 OE IN
21 A10 IN
20 CE IN
19 D7 OUT
18 D6 OUT
17 D5 OUT
16 D4 OUT
15 D3 OUT

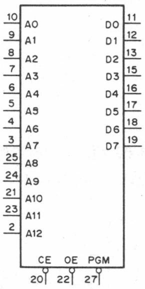
10 A0
9 A1
8 A2
7 A3
6 A4
5 A5
4 A6
3 A7
25 A8
24 A9
21 A10
23 A11
2 A12
D0 11
D1 12
D2 13
D3 15
D4 16
D5 17
D6 18
D7 19
CE 20
OE 22
PGM 27

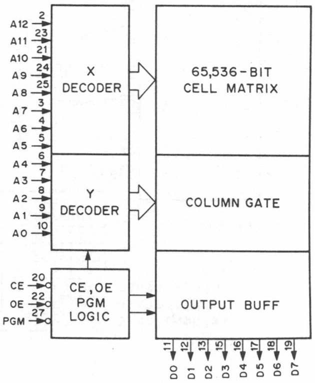
A12 2
A11 23
A10 21
A9 24
A8 25
A7 3
A6 4
A5 5
A4 6
A3 7
A2 8
A1 9
A0 10
X
DECODER
Y
DECODER
65,536-BIT
CELL MATRIX
COLUMN GATE
CE 20
OE 22
PGM 27
CE,OE
PGM
LOGIC
OUTPUT BUFF
D0 11
D1 12
D2 13
D3 15
D4 16
D5 17
D6 18
D7 19

A0–A12 ; ADDRESS
CE ; CHIP ENABLE
D0–D7 ; DATA OUTPUT
OE ; OUTPUT ENABLE
PGM ; PROGRAM ENABLE
VPP ; PROGRAM VOLTAGE

An	CE	OE	PGM	VPP	Dn	FUNCTION
An	0	0	1	+5V	D OUT	READ
An	0	1	1	+5V	HI-Z	OUTPUT DISABLE
An	0	0	0	+5V	HI-Z	OUTPUT DISABLE
X	1	X	X	+5V	HI-Z	STANDBY
An	0	X	⊔	+21V	DIN	PGM
An	0	0	1	+21V	D OUT	PGM VERIFY
X	1	X	X	+21V	HI-Z	PGM INH

0; LOW LEVEL
1; HIGH LEVEL
X; DON'T CARE
HI-Z; HIGH IMPEDANCE

MC14011BCP (MOTOROLA)
uPD4011BC (NEC)

C-MOS 2-INPUT NAND GATE
– TOP VIEW –

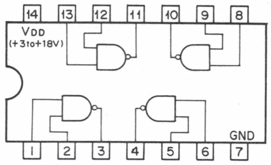
14
13
12
11
10
9
8
VDD
(+3to+18V)
GND
1
2
3
4
5
6
7

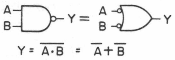

$Y = \overline{A \cdot B} = \overline{A} + \overline{B}$

A	B	Y
0	0	1
0	1	1
1	0	1
1	1	0

0:LOW LEVEL
1:HIGH LEVEL

MC14013BF (MOTOROLA) FLAT PACKAGE

C-MOS D-TYPE FLIP-FLOP WITH DIRECT SET/RESET
– TOP VIEW –

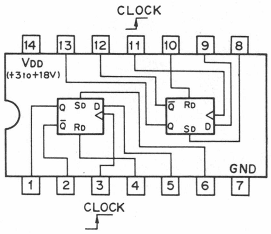
CLOCK
14
13
12
11
10
9
8
VDD
(+3 to +18V)
Q
SD
D
Q̄
RD
Q
RD
Q̄
SD
D
GND
1
2
3
4
5
6
7
CLOCK

DIRECT R-S FLIP FLOP

SD	RD	Q	$\overline{Q}$
0	0	Qn	$\overline{Qn}$
0	1	0	1
1	0	1	0
1	1	1	1

D-TYPE FLIP FLOP

CKn	CKn+1
D	Q
0	0
1	1

0; LOW LEVEL
1; HIGH LEVEL

CLOCK CK; ↑
CKn; BEFORE CLOCK
CKn+1; AFTER CLOCK

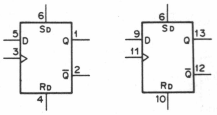
6
SD
5
D
Q
1
3
Q̄
2
RD
4
6
SD
9
D
Q
13
11
Q̄
12
RD
10

MC14052BF (MOTOROLA) FLAT PACKAGE

C-MOS DUAL 4-CHANNEL ANALOG MULTIPLEXER/DEMULTIPLEXER
– TOP VIEW –

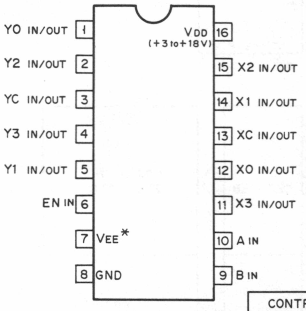
Y0 IN/OUT 1
Y2 IN/OUT 2
YC IN/OUT 3
Y3 IN/OUT 4
Y1 IN/OUT 5
EN IN 6
7 VEE*
8 GND
VDD (+3 to +18V) 16
15 X2 IN/OUT
14 X1 IN/OUT
13 XC IN/OUT
12 X0 IN/OUT
11 X3 IN/OUT
10 A IN
9 B IN

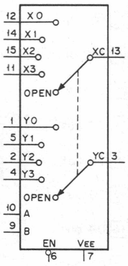
12 X0
14 X1
15 X2
11 X3
XC 13
OPEN
1 Y0
5 Y1
2 Y2
4 Y3
YC 3
OPEN
10 A
9 B
EN 6
VEE 7

VEE*; VDD – VEE = +3 to +18V

CONTROL INPUTS			"ON" CHANNEL
EN	B	A	
0	0	0	0
0	0	1	1
0	1	0	2
0	1	1	3
1	X	X	OPEN

0; LOW LEVEL
1; HIGH LEVEL
X; DON'T CARE.

MC14528BF (MOTOROLA) FLAT PACKAGE

C-MOS RETRIGGERABLE/RESETTABLE MMV
– TOP VIEW –

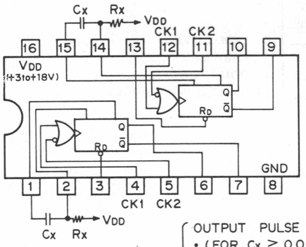
Cx
Rx
VDD
CK1
CK2
16
15
14
13
12
11
10
9
VDD
(+3 to +18V)
Q
RD
Q̄
Q
RD
Q̄
GND
1
2
3
4
5
6
7
8
CK1
CK2
Cx
Rx
VDD

INPUTS			OUTPUTS	
CK1	CK2	RD	Q	$\overline{Q}$
↑	1	1	⎍	⊔
↑	0	1	Q	$\overline{Q}$
1	↓	1	Q	$\overline{Q}$
0	↓	1	⎍	⊔
X	X	0	0	1

0; LOW LEVEL
1; HIGH LEVEL
X; DON'T CARE

OUTPUT PULSE WIDTH Q OR $\overline{Q}$
- (FOR Cx ≧ 0.01μF USE FORMULA)
  PW = 0.2 · Rx · Cx · ℓn (VDD – GND)
- (FOR Cx < 0.01μF USE DATA BOOK.)

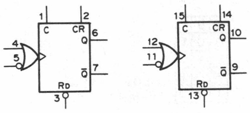
1
2
C
CR
6
Q
4
5
Q̄
7
RD
3
15
14
C
CR
10
Q
12
11
Q̄
9
RD
13

MC14584BCP (MOTOROLA)

C-MOS SCHMITT TRIGGER INVERTER
– TOP VIEW –

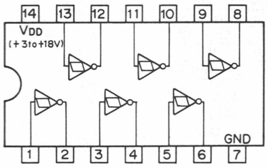
14
13
12
11
10
9
8
VDD
(+3 to +18V)
GND
1
2
3
4
5
6
7

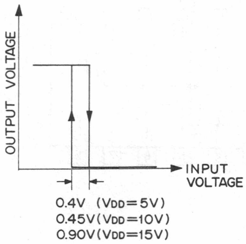

MC74HC4049F (MOTOROLA) FLAT PACKAGE
TC74HC4049F (TOSHIBA) FLAT PACKAGE

C-MOS HEX BUFFER/CONVERTER (INVERTING)
– TOP VIEW –

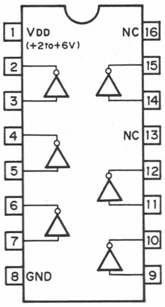
1 VDD (+2 to +6V)
NC 16
2
15
3
14
4
NC 13
5
12
6
11
7
10
8 GND
9

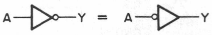

Y = $\overline{A}$

A	Y
0	1
1	0

0 ; LOW LEVEL
1 ; HIGH LEVEL

MC74HC4050F (MOTOROLA) FLAT PACKAGE
TC74HC4050AF (TOSHIBA) FLAT PACKAGE

C-MOS NON-INVERTING TYPE BUFFER/CONVERTER
– TOP VIEW –

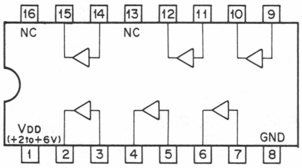
16
15
14
13
12
11
10
9
NC
NC
VDD
(+2 to +6V)
GND
1
2
3
4
5
6
7
8

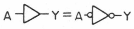

Y = A

A	Y
0	0
1	1

0 ; LOW LEVEL
1 ; HIGH LEVEL

MC79L ? ? ACP (MOTOROLA)

NEGATIVE VOLTAGE REGULATOR (100mA)

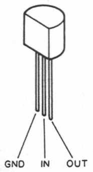

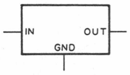

OUTPUT VOLTAGE	NJM79L??A	RC79L??A	AN79L??	MC79L??ACP
-3V	NJM79L03A	RC79L03A	-------	----------
-4V	---------	--------	AN79L04	----------
-5V	NJM79L05A	RC79L05A	AN79L05	MC79L05ACP
-6V	NJM79L06A	RC79L06A	AN79L06	----------
-7V	---------	--------	AN79L07	----------
-8V	NJM79L08A	RC79L08A	AN79L08	----------
-9V	NJM79L09A	RC79L09A	AN79L09	----------
-10V	---------	--------	AN79L10	----------
-12V	NJM79L12A	RC79L12A	AN79L12	MC79L12ACP
-15V	NJM79L15A	RC79L15A	AN79L15	MC79L15ACP
-18V	NJM79L18A	RC79L18A	AN79L18	MC79L18ACP
-20V	---------	--------	AN79L20	----------
-24V	NJM79L24A	RC79L24A	AN79L24	MC79L24ACP

NJM5534M (JRC) FLAT PACKAGE

OPERATINAL AMPLIFIER
– TOP VIEW –

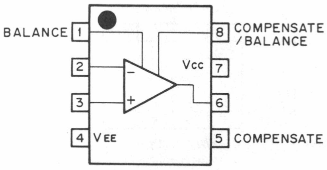
BALANCE 1
2
3
4 VEE
8 COMPENSATE /BALANCE
Vcc 7
6
5 COMPENSATE
–
+

PCM78P-J-1 (BURR-BROWN)

A/D CONVERTER
– TOP VIEW –

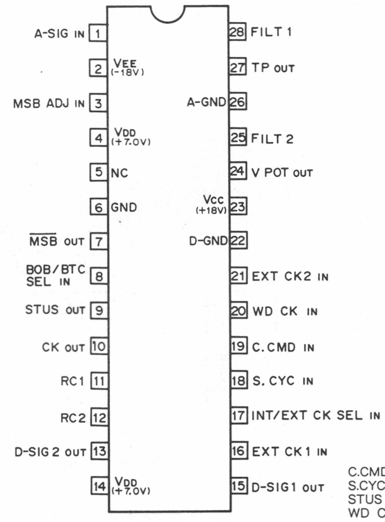
A-SIG IN 1
2 VEE (–18V)
MSB ADJ IN 3
4 VDD (+7.0V)
5 NC
6 GND
MSB OUT 7
BOB/BTC SEL IN 8
STUS OUT 9
CK OUT 10
RC1 11
RC2 12
D-SIG 2 OUT 13
14 VDD (+7.0V)
28 FILT 1
27 TP OUT
A-GND 26
25 FILT 2
24 V POT OUT
Vcc (+18V) 23
D-GND 22
21 EXT CK2 IN
20 WD CK IN
19 C.CMD IN
18 S. CYC IN
17 INT/EXT CK SEL IN
16 EXT CK1 IN
15 D-SIG1 OUT

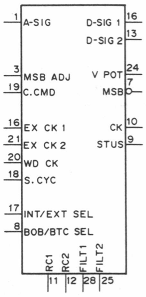
1 A-SIG
3 MSB ADJ
19 C.CMD
16 EX CK 1
21 EX CK 2
20 WD CK
18 S. CYC
17 INT/EXT SEL
8 BOB/BTC SEL
D-SIG 1 16
D-SIG 2 13
V POT 24
7 MSB
CK 10
STUS 9
RC1 RC2 FILT1 FILT2
11 12 28 25

C.CMD : CONVERTER COMMAND SIGNAL
S.CYC : SHORT CYCLE TIMING
STUS : STATUS SIGNAL
WD CK : WORD CLOCK

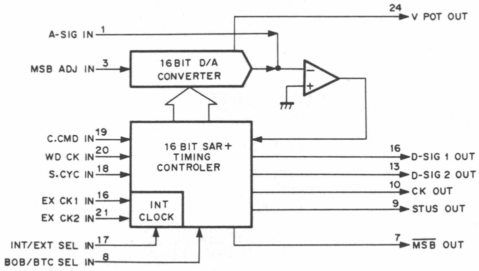
A-SIG IN 1
MSB ADJ IN 3
16 BIT D/A CONVERTER
24 V POT OUT
C.CMD IN 19
WD CK IN 20
S.CYC IN 18
EX CK1 IN 16
EX CK2 IN 21
16 BIT SAR + TIMING CONTROLER
INT CLOCK
16 D-SIG 1 OUT
13 D-SIG 2 OUT
10 CK OUT
9 STUS OUT
7 MSB OUT
INT/EXT SEL IN 17
BOB/BTC SEL IN 8

SN74HC00NS (TI) FLAT PACKAGE

C-MOS QUAD 2-INPUT NAND GATE
– TOP VIEW –

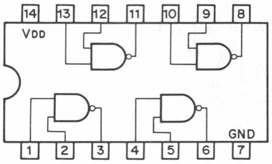
14 13 12 11 10 9 8
VDD
GND
1 2 3 4 5 6 7

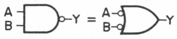

$Y = \overline{A \cdot B} = \overline{A} + \overline{B}$

A	B	Y
0	0	1
0	1	1
1	0	1
1	1	0

0; LOW LEVEL
1; HIGH LEVEL

TYPE	VDD
TC74AC00P	+2 to +5.5V
MC74HCT00N 74ACT00PC	+5V
OTHER TYPES	+2 to +6V

SN74HC04NS (TI) FLAT PACKAGE

C-MOS HEX INVERTER
– TOP VIEW –

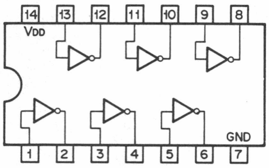
14 13 12 11 10 9 8
VDD
GND
1 2 3 4 5 6 7

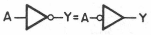

$Y = \overline{A}$

A	Y
0	1
1	0

0: LOW LEVEL
1: HIGH LEVEL

NOTE :

TYPE	VDD
74ACT04 TYPES 74HCT04 TYPES	+5V
OTHER TYPES	+2V to +6V

SN74HC08NS (TI) FLAT PACKAGE

C-MOS QUAD 2-INPUT AND GATE
– TOP VIEW –

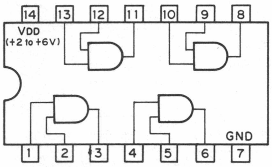
14 13 12 11 10 9 8
VDD (+2 to +6V)
GND
1 2 3 4 5 6 7

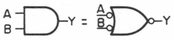

$Y = A \cdot B = \overline{\overline{A} + \overline{B}}$

A	B	Y
0	0	0
0	1	0
1	0	0
1	1	1

0; LOW LEVEL
1; HIGH LEVEL

SN74HC161NS (TI) ($V_{DD} = +2$ to $+6V$) FLAT PACKAGE

C-MOS SYNCHRONOUS PRESETTABLE 4-BIT BINARY COUNTER
– TOP VIEW –

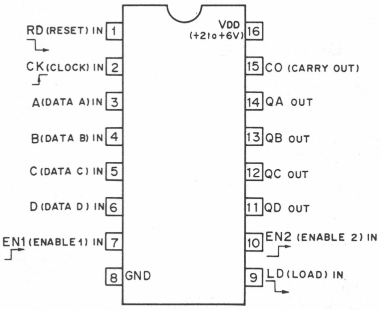
RD (RESET) IN 1
CK (CLOCK) IN 2
A (DATA A) IN 3
B (DATA B) IN 4
C (DATA C) IN 5
D (DATA D) IN 6
EN1 (ENABLE 1) IN 7
8 GND
VDD (+2 to +6V) 16
15 CO (CARRY OUT)
14 QA OUT
13 QB OUT
12 QC OUT
11 QD OUT
10 EN2 (ENABLE 2) IN
9 LD (LOAD) IN

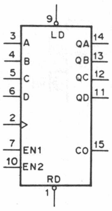
9
LD
3 A
4 B
5 C
6 D
2
7 EN1
10 EN2
RD
1
QA 14
QB 13
QC 12
QD 11
CO 15

MODE SELECTION

CONTROL INPUTS				MODE
RD	LD	EN1	EN2	
0	X	X	X	RESET (ASYNCHRONOUS)
1	0	X	X	PRESET (SYNCHRONOUS)
1	1	0	X	NO COUNT
1	1	X	0	NO COUNT
1	1	1	1	COUNT

0; LOW LEVEL
1; HIGH LEVEL
X; DON'T CARE

CARRY OUTPUT "CO"

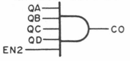
QA
QB
QC
QD
EN2
CO

CO IS HIGH WHEN EN2 INPUT IS HIGH AND COUNT IS "15".

COUNT SEQUENCE

COUNT	OUTPUTS			
	QD	QC	QB	QA
0	0	0	0	0
1	0	0	0	1
2	0	0	1	0
3	0	0	1	1
4	0	1	0	0
5	0	1	0	1
6	0	1	1	0
7	0	1	1	1
8	1	0	0	0
9	1	0	0	1
10	1	0	1	0
11	1	0	1	1
12	1	1	0	0
13	1	1	0	1
14	1	1	1	0
15	1	1	1	1

SN74HC163NS (TI) (V_{DD} = +2 to +6V) FLAT PACKAGE
TC74AC163F (TOSHIBA) (V_{DD} = +2 to +5.5V) FLAT PACKAGE

C-MOS PRESETTABLE SYNCHRONOUS 4-BIT BINARY COUNTER
– TOP VIEW –

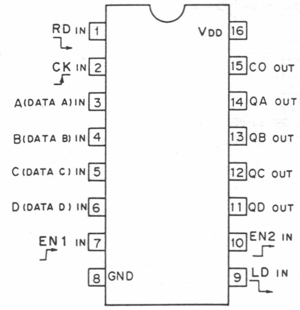
RD IN 1
CK IN 2
A(DATA A) IN 3
B(DATA B) IN 4
C(DATA C) IN 5
D(DATA D) IN 6
EN1 IN 7
8 GND
VDD 16
15 CO OUT
14 QA OUT
13 QB OUT
12 QC OUT
11 QD OUT
10 EN2 IN
9 LD IN

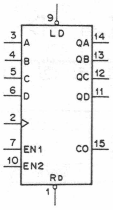
9
LD
3 A
4 B
5 C
6 D
2
7 EN1
10 EN2
QA 14
QB 13
QC 12
QD 11
CO 15
RD
1

MODE SELECTION

CONTROL INPUTS				MODE
RD	LD	EN1	EN2	
0	X	X	X	RESET (SYNCHRONOUS)
1	0	X	X	PRESET (SYNCHRONOUS)
1	1	0	X	NO COUNT
1	1	X	0	NO COUNT
1	1	1	1	COUNT

CARRY OUTPUT "CO"

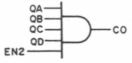
QA
QB
QC
QD
EN2
CO

CO IS HIGH WHEN EN2 INPUT IS HIGH AND COUNT IS "15".

COUNT SEQUENCE

COUNT	OUTPUTS			
	QD	QC	QB	QA
0	0	0	0	0
1	0	0	0	1
2	0	0	1	0
3	0	0	1	1
4	0	1	0	0
5	0	1	0	1
6	0	1	1	0
7	0	1	1	1
8	1	0	0	0
9	1	0	0	1
10	1	0	1	0
11	1	0	1	1
12	1	1	0	0
13	1	1	0	1
14	1	1	1	0
15	1	1	1	1

SN74HC164NS (TI) FLAT PACKAGE

C-MOS 8-BIT SERIAL-IN/PARALLEL-OUT SHIFT REGISTER
– TOP VIEW –

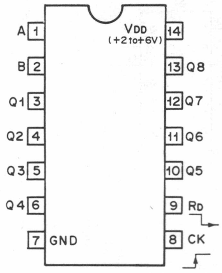
A 1
B 2
Q1 3
Q2 4
Q3 5
Q4 6
7 GND
VDD (+2 to +6V) 14
13 Q8
12 Q7
11 Q6
10 Q5
9 RD
8 CK

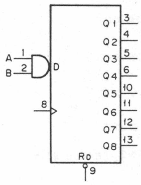
A 1
B 2
D
8
Q1 3
Q2 4
Q3 5
Q4 6
Q5 10
Q6 11
Q7 12
Q8 13
RD
9

INPUTS				OUTPUTS			
RD	CK	A	B	Q1	Q2	----	Q8
0	X	X	X	0	0	0	0
1	0	X	X	Q1o	Q2o	----	Q8o
1	↑	1	1	1	Q1n	----	Q7n
1	↑	0	X	0	Q1n	----	Q7n
1	↑	X	0	0	Q1n	----	Q7n

0; LOW LEVEL
1; HIGH LEVEL
X; DON'T CARE

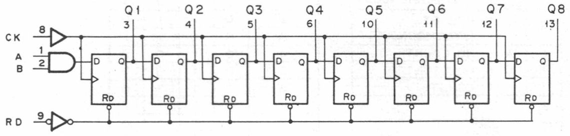
CK 8
A 1
B 2
RD 9
Q1 3
Q2 4
Q3 5
Q4 6
Q5 10
Q6 11
Q7 12
Q8 13
D Q
RD

SN74HC174NS (TI) FLAT PACKAGE

C-MOS D-TYPE FLIP-FLOP WITH RESET
– TOP VIEW –

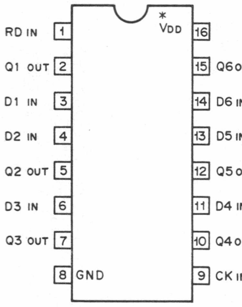
RD IN 1
Q1 OUT 2
D1 IN 3
D2 IN 4
Q2 OUT 5
D3 IN 6
Q3 OUT 7
8 GND
* VDD 16
15 Q6 OUT
14 D6 IN
13 D5 IN
12 Q5 OUT
11 D4 IN
10 Q4 OUT
9 CK IN

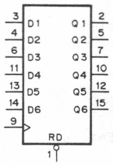
3 D1
4 D2
6 D3
11 D4
13 D5
14 D6
9
Q1 2
Q2 5
Q3 7
Q4 10
Q5 12
Q6 15
RD
1

EACH FLIP-FLOP

INPUT			OUT
RD	CK	D	Q
0	X	X	0
1	↑	0	0
1	↑	1	1
1	0	X	Qo

0; LOW LEVEL
1; HIGH LEVEL
X; DON'T CARE

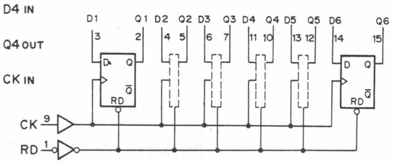
D1 3
Q1 2
D2 4
Q2 5
D3 6
Q3 7
D4 11
Q4 10
D5 13
Q5 12
D6 14
Q6 15
CK 9
RD 1
D Q
Q̄
RD

*

TYPE	VDD
74AC	+3.3 to +5V
74ACT	+5V
74HC	+2 to +6V

SN74HC175NS (TI) (V_{DD} = +2 to +6V) FLAT PACKAGE

C-MOS D-TYPE FLIP-FLOP WITH RESET
– TOP VIEW –

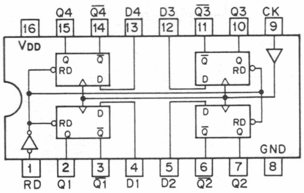
Q4 Q̄4 D4 D3 Q̄3 Q3 CK
16 15 14 13 12 11 10 9
VDD
GND
1 2 3 4 5 6 7 8
RD Q1 Q̄1 D1 D2 Q̄2 Q2
Q Q̄ RD D

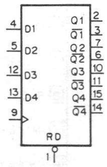
4 D1
5 D2
12 D3
13 D4
9
Q1 2
Q̄1 3
Q2 7
Q̄2 6
Q3 10
Q̄3 11
Q4 15
Q̄4 14
RD
1

RD	CK	D	Q	Q̄
0	X	X	0	1
1	↑	1	1	0
1	↑	0	0	1
1	0	X	Qo	Q̄o

0 ; LOW LEVEL
1 ; HIGH LEVEL
X ; DON'T CARE
Qo ; NO CHANGE
Q̄o ; NO CHANGE

SN74HC32NS (TI) FLAT PACKAGE

C-MOS 2-INPUT OR GATE
– TOP VIEW –

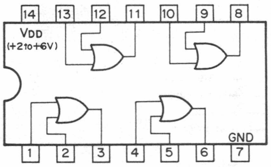
14 13 12 11 10 9 8
VDD (+2 to +6V)
GND
1 2 3 4 5 6 7

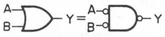

$Y = A + B = \overline{\overline{A} \cdot \overline{B}}$

A	B	Y
0	0	0
0	1	1
1	0	1
1	1	1

0; LOW LEVEL
1; HIGH LEVEL

SN74HC374NS (TI) FLAT PACKAGE

C-MOS 3-STATE OCTAL D-TYPE FLIP-FLOP
– TOP VIEW –

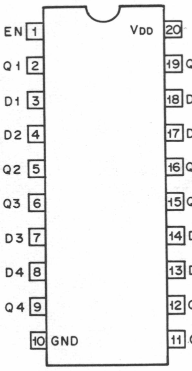
EN 1
Q1 2
D1 3
D2 4
Q2 5
Q3 6
D3 7
D4 8
Q4 9
10 GND
VDD 20
19 Q8
18 D8
17 D7
16 Q7
15 Q6
14 D6
13 D5
12 Q5
11 CK

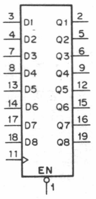
3 D1
4 D2
7 D3
8 D4
13 D5
14 D6
17 D7
18 D8
11
Q1 2
Q2 5
Q3 6
Q4 9
Q5 12
Q6 15
Q7 16
Q8 19
EN
1

INPUTS			OUT
EN	D	CK	Q
0	1	↑	1
0	0	↑	0
0	X	0	Qo
1	X	X	HI-Z

0; LOW LEVEL
1 ; HIGH LEVEL
X ; DON'T CARE
HI-Z; HIGH IMPEDANCE

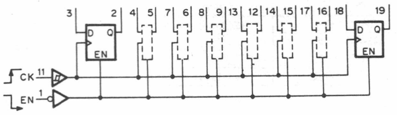
3 2 4 5 7 6 8 9 13 12 14 15 17 16 18 19
D Q
EN
CK 11
EN 1

NOTE :

TYPE	VDD
74AC/74HC	+2 to +6V
74ACT/74HCT	+5V

SN74HC74NS (TI) FLAT PACKAGE

C-MOS D-TYPE FLIP FLOP WITH DIRECT SET/RESET

– TOP VIEW –

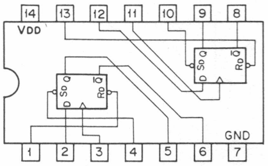
14
13
12
11
10
9
8
VDD
GND
1
2
3
4
5
6
7

INPUTS				OUTPUTS	
$\overline{SD}$	$\overline{RD}$	CK	D	Qn+1	$\overline{Qn+1}$
0	1	X	X	1	0
1	0	X	X	0	1
0	0	X	X	1	1
1	1	↑	1	1	0
1	1	↑	0	0	1
1	1	0	X	Qn	$\overline{Q}$n

0; LOW LEVEL
1; HIGH LEVEL
X; DON'T CARE

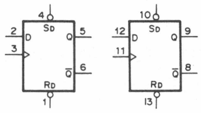
4
SD
2
D
3
5
Q
6
Q̄
RD
1
10
SD
12
D
11
9
Q
8
Q̄
RD
13

NOTE :

TYPE	VDD
74AC/74HC	+2 to +6V
74ACT	+5V

SN74LS624NS (TI) FLAT PACKAGE

TTL VOLTAGE CONTROLLED OSCILLATOR

– TOP VIEW –

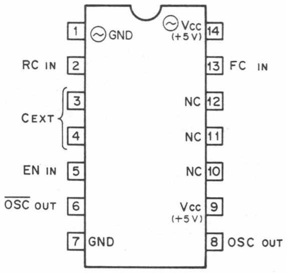
1 ~GND
RC IN 2
CEXT 3
4
EN IN 5
OSC̄ OUT 6
7 GND
~VCC (+5V) 14
13 FC IN
NC 12
NC 11
NC 10
VCC (+5V) 9
8 OSC OUT

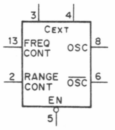
3
4
CEXT
13
FREQ CONT
OSC
8
2
RANGE CONT
OSC̄
6
EN
5

EN	OSC	$\overline{OSC}$
0	ENABLE	ENABLE
1	0	1

0; LOW LEVEL
1; HIGH LEVEL

SSM2016P (PMI)

DIFFERENTIAL AUDIO PREAMPLIFIER

– TOP VIEW –

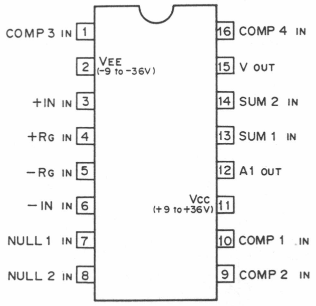
COMP 3 IN 1
2 VEE (-9 to -36V)
+IN IN 3
+RG IN 4
-RG IN 5
-IN IN 6
NULL 1 IN 7
NULL 2 IN 8
16 COMP 4 IN
15 V OUT
14 SUM 2 IN
13 SUM 1 IN
12 A1 OUT
VCC (+9 to +36V) 11
10 COMP 1 IN
9 COMP 2 IN

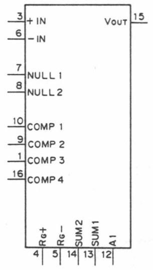
3 +IN
6 -IN
VOUT 15
7 NULL 1
8 NULL 2
10 COMP 1
9 COMP 2
1 COMP 3
16 COMP 4
RG+
RG-
SUM2
SUM1
A1
4
5
14
13
12

NULL1 – 2 ; OFFSET ADJUST INPUT
COMP1 – 4 ; COMPENSATION INPUT
RG +, RG –, SUM1 – 2 ; GAIN SETTING PIN

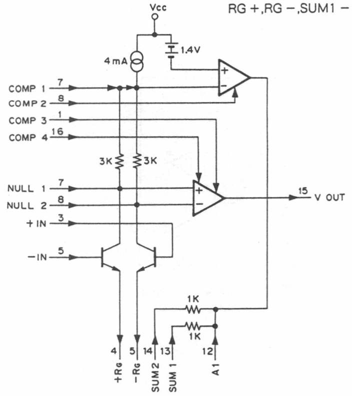
VCC
4mA
1.4V
COMP 1 7
COMP 2 8
COMP 3 1
COMP 4 16
3K
3K
NULL 1 7
NULL 2 8
+IN 3
-IN 5
15 V OUT
1K
1K
4
5
14
13
12
+RG
-RG
SUM 2
SUM 1
A1

TC74AC153F (TOSHIBA) FLAT PACKAGE

C-MOS DUAL 4-LINE-TO-1-LINE DATA SELECTOR/MULTIPLEXER

– TOP VIEW –

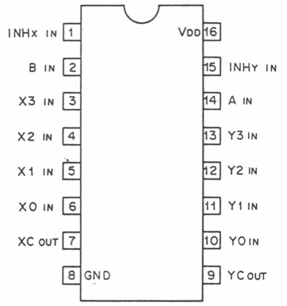
INHX IN 1
B IN 2
X3 IN 3
X2 IN 4
X1 IN 5
X0 IN 6
XC OUT 7
8 GND
VDD 16
15 INHY IN
14 A IN
13 Y3 IN
12 Y2 IN
11 Y1 IN
10 Y0 IN
9 YC OUT

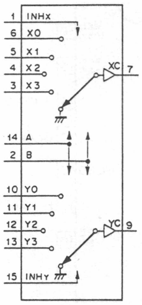
1 INHX
6 X0
5 X1
4 X2
3 X3
XC 7
14 A
2 B
10 Y0
11 Y1
12 Y2
13 Y3
YC 9
15 INHY

TYPE	VDD
EXCEPT FOL. TYPE	+2 to +6V
74ACT153PC 74ACT153SJ	+5V
TC74AC153P	+2 to +5.5V

CONTROL IN			ON CHANNEL
INH	B	A	
0	0	0	0
0	0	1	1
0	1	0	2
0	1	1	3
1	X	X	GND

0; LOW LEVEL
1; HIGH LEVEL
X; DON'T CARE

TC74HC4538AF (TOSHIBA) FLAT PACKAGE

C-MOS DUAL RETRIGGERABLE/NON-RETRIGGERABLE MONOSTABLE MULTIVIBRATOR

– TOP VIEW –

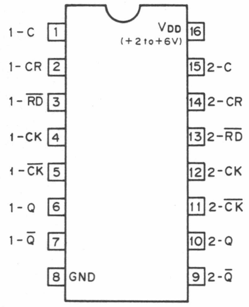
1-C 1
1-CR 2
1-R̄D 3
1-CK 4
1-C̄K̄ 5
1-Q 6
1-Q̄ 7
8 GND
VDD (+2 to +6V) 16
15 2-C
14 2-CR
13 2-R̄D
12 2-CK
11 2-C̄K̄
10 2-Q
9 2-Q̄

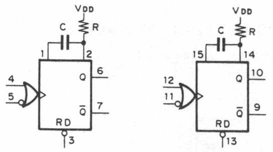
VDD
C
R
1
2
4
5
Q
6
Q̄
7
RD
3
VDD
C
R
15
14
12
11
Q
10
Q̄
9
RD
13

OUTPUT PULSE WIDTH = k·C·R

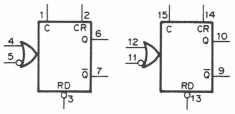
1
2
C
CR
4
5
Q
6
Q̄
7
RD
3
15
14
C
CR
12
11
Q
10
Q̄
9
RD
13

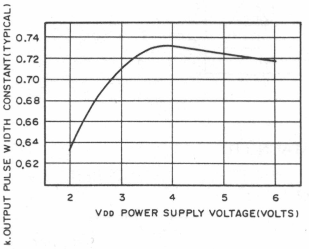

RETRIGGERABLE M.M.V

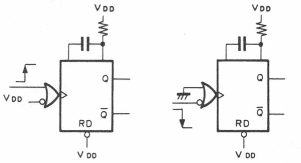
VDD
VDD
Q
Q̄
RD
VDD
VDD
Q
Q̄
RD
VDD

NON-RETRIGGERABLE M.M.V

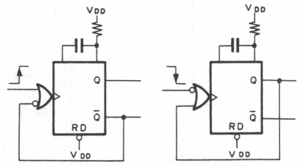
VDD
Q
Q̄
RD
VDD
VDD
Q
Q̄
RD
VDD

TDA1535 (SIGNETICS)

HIGH-SPEED SAMPLE AND HOLD AMPLIFIER
– TOP VIEW –

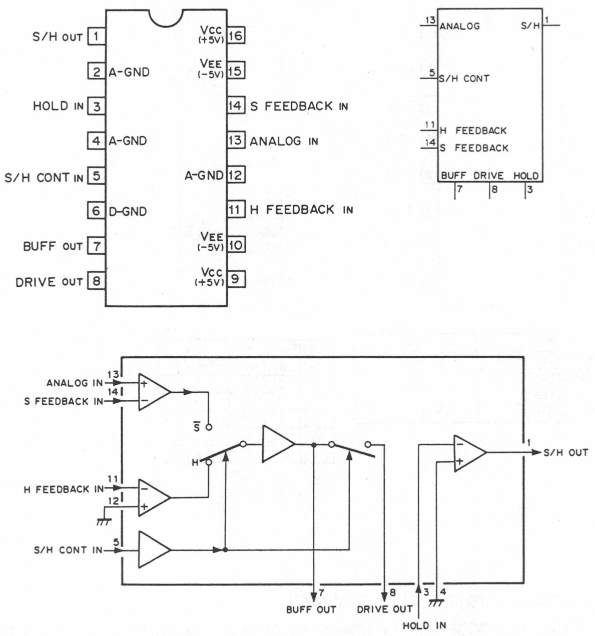
S/H OUT 1
2 A-GND
HOLD IN 3
4 A-GND
S/H CONT IN 5
6 D-GND
BUFF OUT 7
DRIVE OUT 8
Vcc (+5V) 16
VEE (-5V) 15
14 S FEEDBACK IN
13 ANALOG IN
A-GND 12
11 H FEEDBACK IN
VEE (-5V) 10
Vcc (+5V) 9
13 ANALOG
S/H 1
5 S/H CONT
11 H FEEDBACK
14 S FEEDBACK
BUFF DRIVE HOLD
7 8 3
ANALOG IN 13
S FEEDBACK IN 14
S
H
H FEEDBACK IN 11
12
S/H CONT IN 5
1 S/H OUT
7 BUFF OUT
8 DRIVE OUT
3 HOLD IN
4

TL062CPS (TI) FLAT PACKAGE

OPERATIONAL AMPLIFIER
(JFET INPUT)
– TOP VIEW –

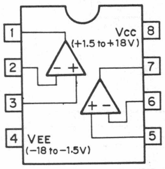
1
2
3
4 VEE (-18 to -1.5V)
Vcc (+1.5 to +18V) 8
7
6
5

TL1451ACN (TI)

DUAL PWM POWER CONTROLLER
– TOP VIEW –

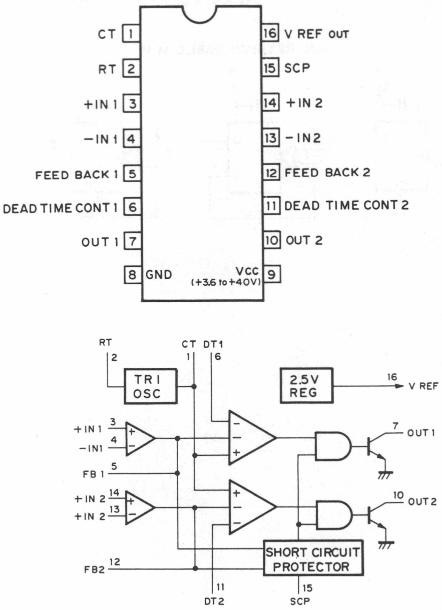
CT 1
RT 2
+IN 1 3
−IN 1 4
FEED BACK 1 5
DEAD TIME CONT 1 6
OUT 1 7
8 GND
16 V REF OUT
15 SCP
14 +IN 2
13 −IN 2
12 FEED BACK 2
11 DEAD TIME CONT 2
10 OUT 2
Vcc (+3.6 to +40V) 9
RT 2
CT 1
DT1 6
TRI OSC
2.5V REG
16 V REF
+IN 1 3
−IN1 4
FB 1 5
7 OUT 1
+IN 2 14
+IN 2 13
10 OUT 2
FB2 12
SHORT CIRCUIT PROTECTOR
11 DT2
15 SCP

TL431CLP (TI)

ADJUSTABLE PRECISION SHUNT REGULATOR

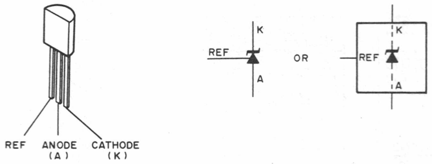
REF
ANODE (A)
CATHODE (K)
REF
K
A
OR
REF
K
A

TLC27M2CPS (TI) FLAT PACKAGE

OPERATIONAL AMPLIFIER
– TOP VIEW –

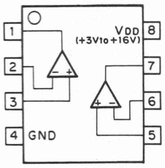
1
2
3
4 GND
VDD (+3V to +16V) 8
7
6
5

uPC311G2 (NEC) FLAT PACKAGE

VOLTAGE COMPARATOR
– TOP VIEW –

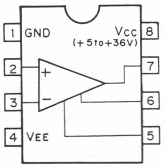
1 GND
2
3
4 VEE
Vcc (+5 to +36V) 8
7
6
5

uPC319G2 (NEC) FLAT PACKAGE

DUAL VOLTAGE COMPARATOR
– TOP VIEW –

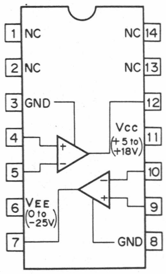
1 NC
2 NC
3 GND
4
5
6 VEE (0 to -25V)
7
NC 14
NC 13
12
Vcc (+5 to +18V) 11
10
9
GND 8

uPC339C (NEC)

COMPARATOR
– TOP VIEW –

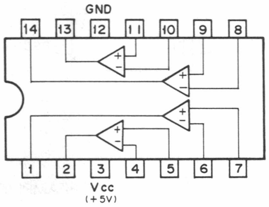
GND
14 13 12 11 10 9 8
1 2 3 4 5 6 7
Vcc (+5V)

TL7705ACPS (TI) FLAT PACKAGE

POWER VOLTAGE SUPERVISOR
– TOP VIEW –

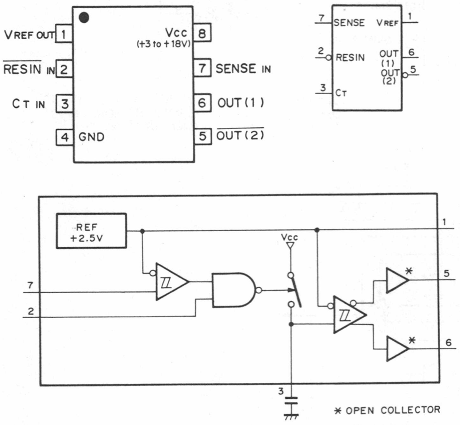
VREF OUT 1
RESIN IN 2
CT IN 3
4 GND
Vcc (+3 to +18V) 8
7 SENSE IN
6 OUT (1)
5 OUT (2)
7 SENSE
VREF 1
2 RESIN
OUT (1) 6
OUT (2) 5
3 CT
REF +2.5V
Vcc
1
7
2
5
6
3
* OPEN COLLECTOR

SECTION C
SCHEMATIC DIAGRAMS AND BOARD ILLUSTRATIONS

BOARD LAYOUT

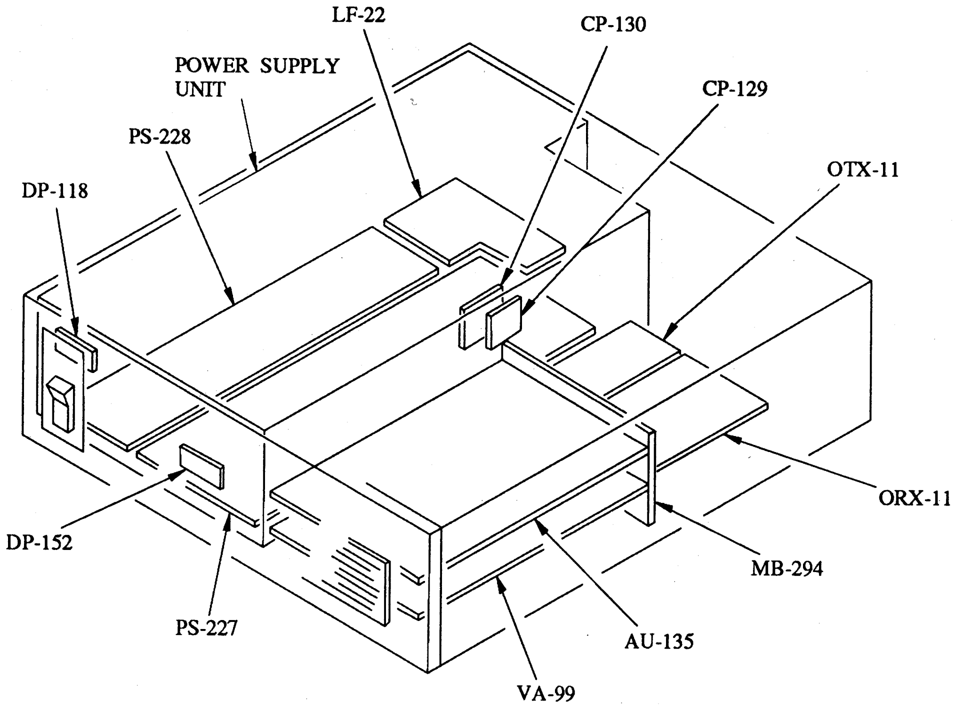
LF-22
CP-130
POWER SUPPLY UNIT
CP-129
PS-228
OTX-11
DP-118
ORX-11
DP-152
MB-294
PS-227
AU-135
VA-99

ORX-11 BOARD

Ser No.10001-10100

ORX-11 (1-635-698-11)	
CN1	F-2
D1	F-4
D2	F-4
D3	E-4
D101	B-3
D201	F-4
D301	B-5
D401	B-2
E1	F-5
E101	F-1
E201	F-2
E301	F-2
E401	F-1
IC1	E-4
Q1	F-5
Q2	E-5
Q101	C-2
Q102	C-3
Q103	C-2
Q104	C-2
Q105	D-2
Q201	C-4
Q202	C-4
Q203	C-4
Q204	C-4
Q205	D-3
Q301	C-5
Q302	C-5
Q303	C-5
Q304	C-5
Q305	D-5
Q401	C-1
Q402	C-2
Q403	C-1
Q404	C-1
Q405	D-1
RV1	F-4
RV101	C-2
RV102	D-2
RV103	C-3
RV201	C-3
RV202	D-4
RV203	C-4
RV301	C-4
RV302	D-5
RV303	C-5
RV401	C-1
RV402	D-1
RV403	C-2
TP1	E-5
TP2	E-5
TP3	E-3
TP101	E-1
TP201	E-2
TP301	E-2
TP401	E-1

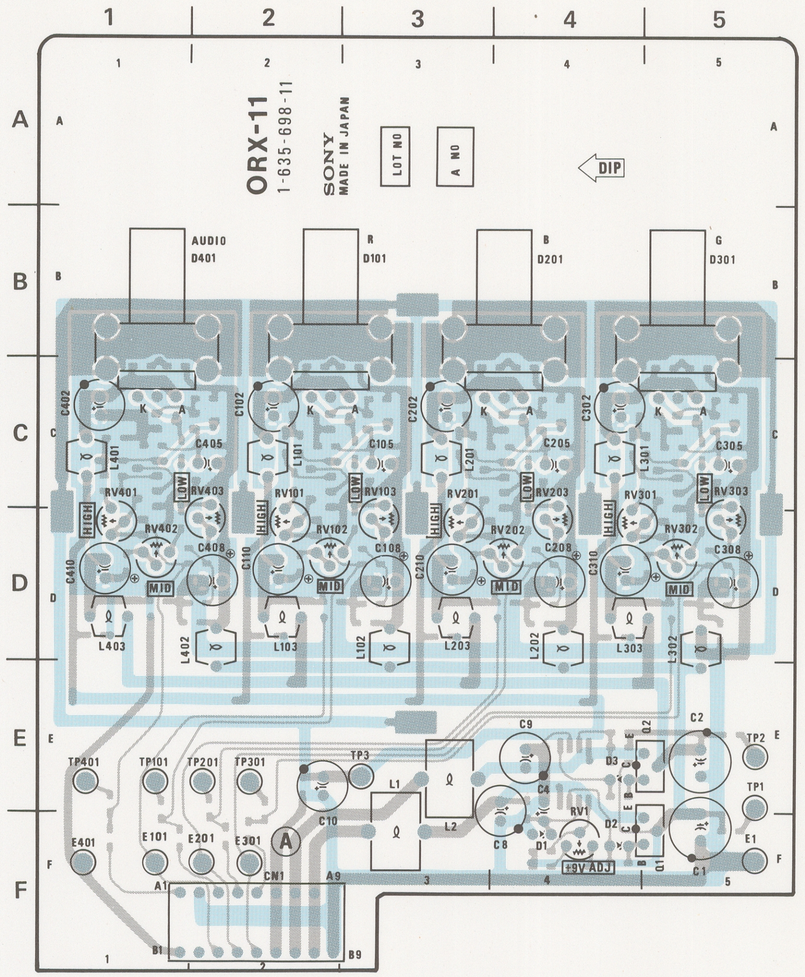

ORX-11
1-635-698-11
SONY
MADE IN JAPAN
LOT NO
A NO
DIP
AUDIO D401
R D101
B D201
G D301
HIGH
MID
LOW
+8V ADJ
CN1

1-635-698-11 COMPONENT SIDE

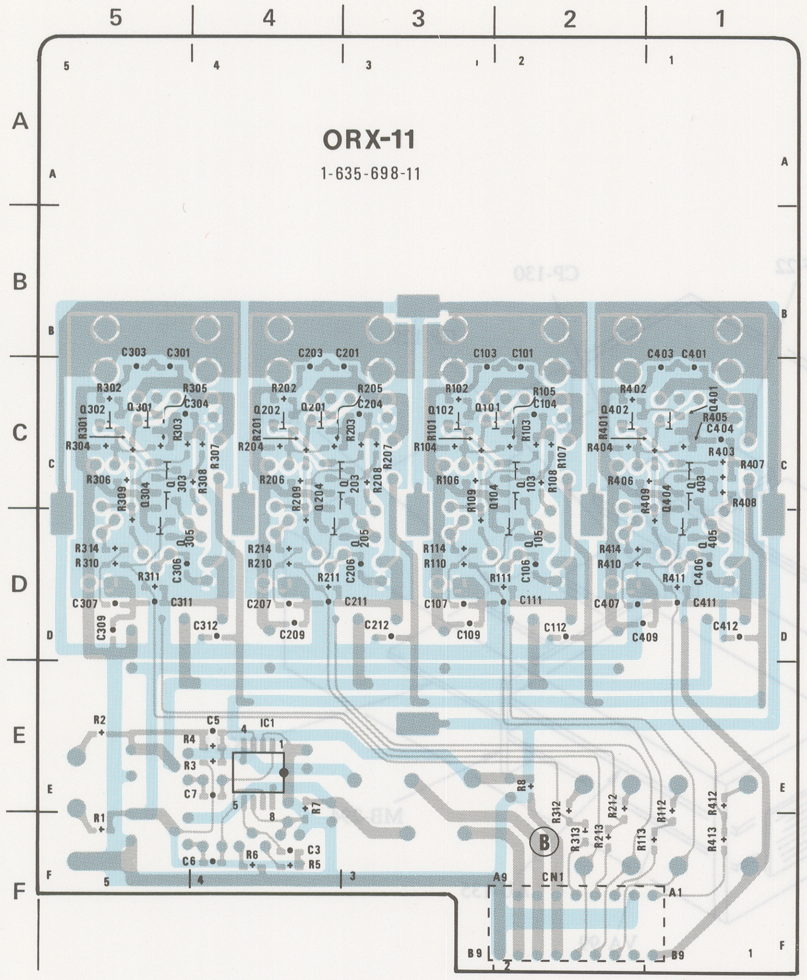

ORX-11
1-635-698-11
IC1
CN1

1-635-698-11 SOLDERING SIDE

ORX-11 BOARD

Ser No.10101-

ORX-11 (1-635-698-12)	
CN1	F-2
D1	F-4
D2	F-4
D3	E-4
D101	B-3
D201	B-4
D301	B-5
D401	B-1
E1	F-5
E101	F-1
E201	F-2
E301	F-2
E401	F-1
IC1	E-4
Q1	F-5
Q2	E-5
Q101	C-2
Q102	C-3
Q103	C-2
Q104	C-2
Q105	D-2
Q201	C-4
Q202	C-4
Q203	C-4
Q204	C-4
Q205	D-3
Q301	C-5
Q302	C-5
Q303	C-5
Q304	C-5
Q305	D-5
Q401	C-1
Q402	C-2
Q403	C-1
Q404	C-1
Q405	D-1
RV1	F-4
RV101	C-2
RV102	D-2
RV103	C-3
RV201	C-3
RV202	D-4
RV203	C-4
RV301	C-4
RV302	D-5
RV303	C-5
RV401	C-1
RV402	D-1
RV403	C-2
TP1	E-5
TP2	E-5
TP3	E-3
TP101	E-1
TP201	E-2
TP301	E-2
TP401	E-1

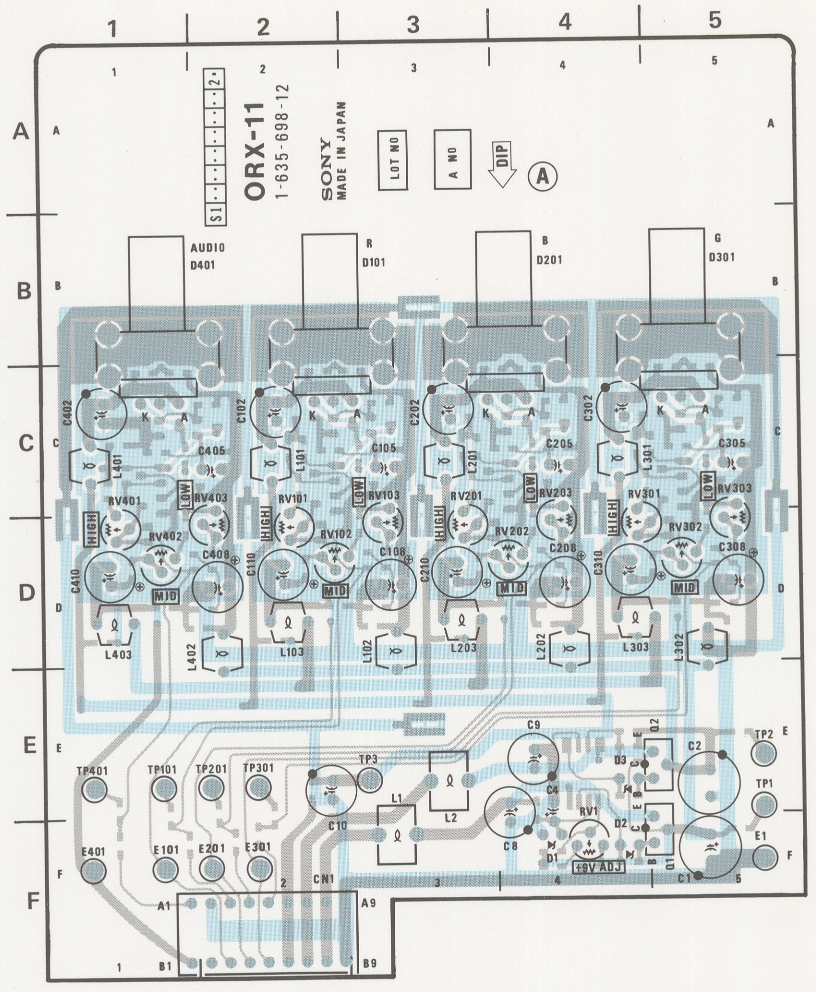
1
2
3
4
5
A
B
C
D
E
F
ORX-11
1-635-698-12
SONY
MADE IN JAPAN
LOT NO
A NO
DIP
A
AUDIO D401
R D101
B D201
G D301
HIGH
MID
LOW
RV401
RV402
RV403
RV101
RV102
RV103
RV201
RV202
RV203
RV301
RV302
RV303
L401
L402
L403
L101
L102
L103
L201
L202
L203
L301
L302
L303
TP401
TP101
TP201
TP301
TP3
TP2
TP1
E401
E101
E201
E301
E1
CN1
A1
A9
B1
B9
IC1
RV1
L1
L2
C9
C10
C8
D1
D2
D3
Q1
Q2
C1
C2
+9V ADJ

1-635-698-12 COMPONENT SIDE

1-635-698-12 SOLDERING SIDE

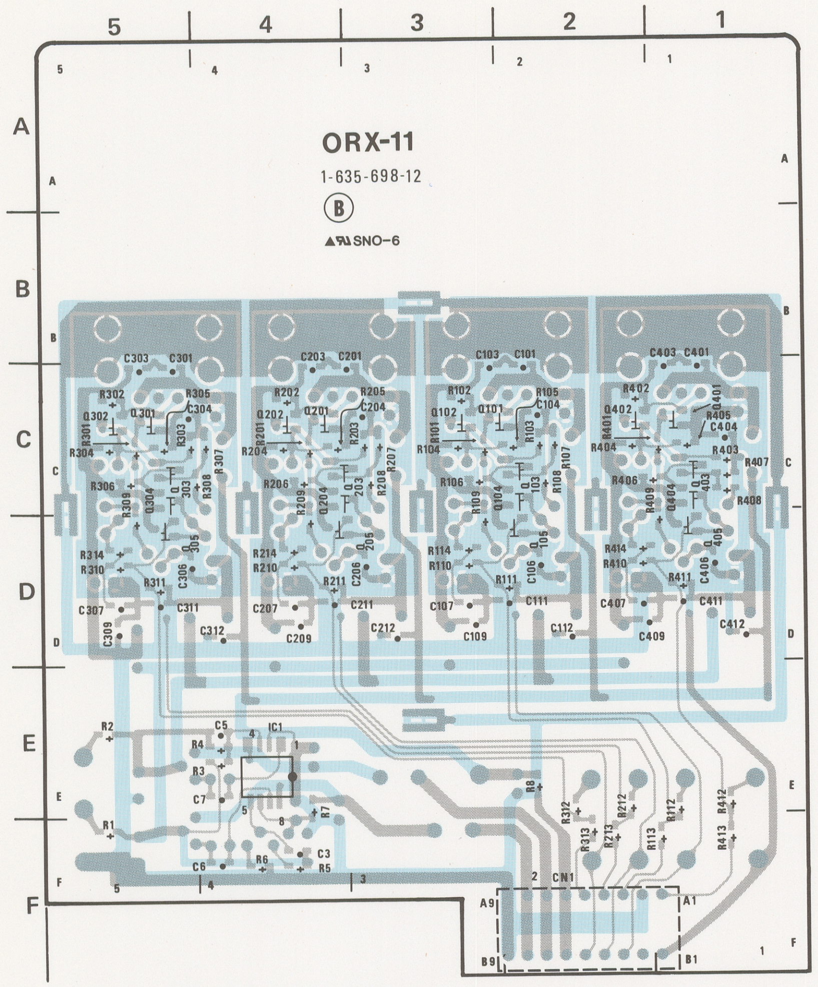
5
4
3
2
1
A
B
C
D
E
F
ORX-11
1-635-698-12
B
SNO-6
C303
C301
C203
C201
C103
C101
C403
C401
Q302
Q301
Q202
Q201
Q102
Q101
Q402
Q401
IC1
CN1
A1
A9
B1
B9

1-635-698-12 COMPONENT SIDE

1-635-698-12 SOLDERING SIDE

ORX-11 BOARD
OPTICAL RECEIVER

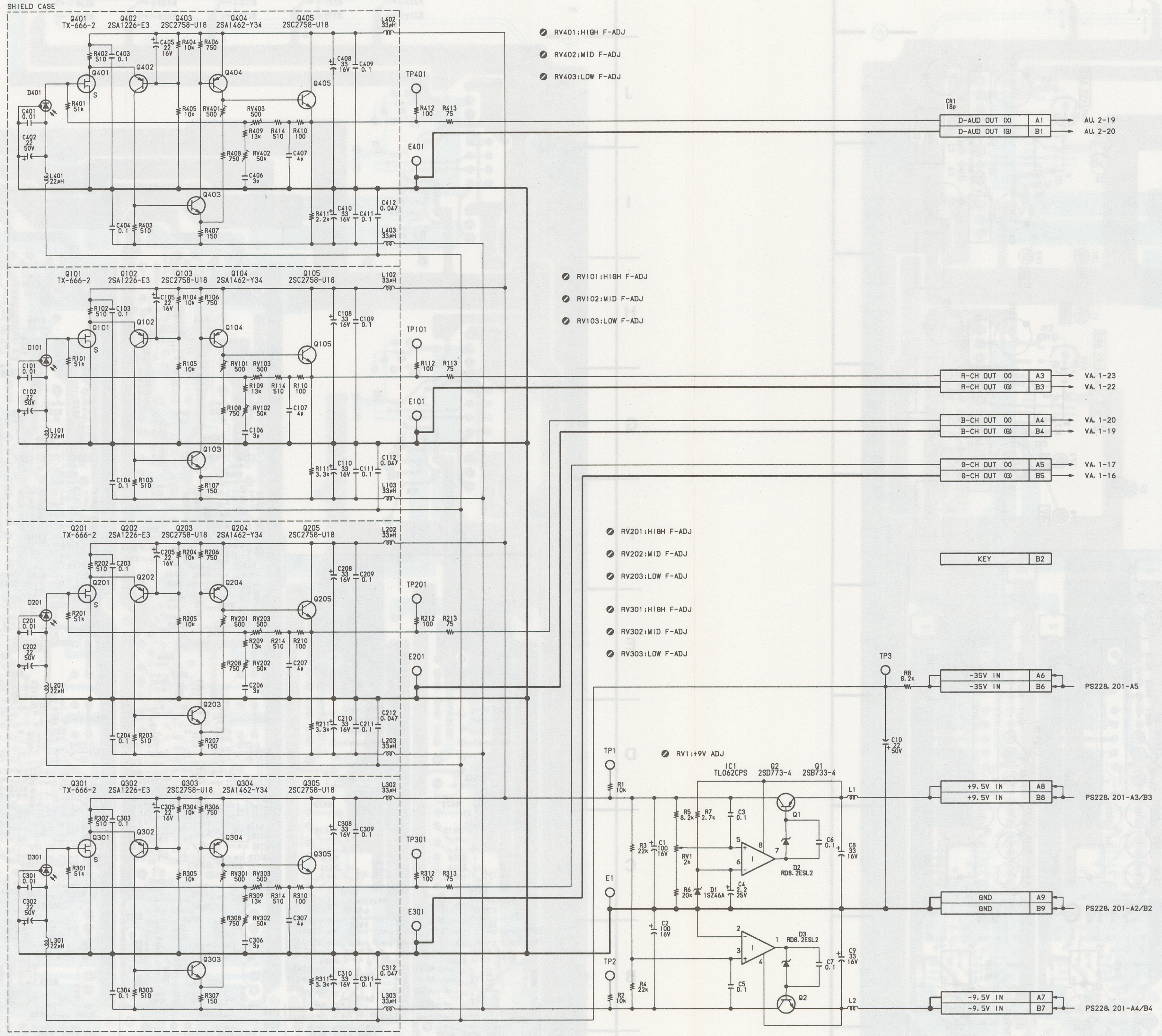
SHIELD CASE
Q401 TX-666-2
Q402 2SA1226-E3
Q403 2SC2758-U18
Q404 2SA1462-Y34
Q405 2SC2758-U18
L402 33μH
D401
C401 0.01
C402 22 50V
L401 22μH
R401 51k
R402 510
C403 0.1
C405 22 16V
R404 10k
R406 750
R405 10k
RV401 500
RV403 500
R409 13k
R414 510
R410 100
R408 750
RV402 50k
C406 3p
C407 4p
C408 33 16V
C409 0.1
C404 0.1
R403 510
R407 150
R411 2.2k
C410 33 16V
C411 0.1
C412 0.047
L403 33μH
TP401
R412 100
R413 75
E401
Q101 TX-666-2
Q102 2SA1226-E3
Q103 2SC2758-U18
Q104 2SA1462-Y34
Q105 2SC2758-U18
L102 33μH
C105 22 16V
R104 10k
R106 750
R102 510
C103 0.1
C108 33 16V
C109 0.1
TP101
E101
Q201 TX-666-2
Q202 2SA1226-E3
Q203 2SC2758-U18
Q204 2SA1462-Y34
Q205 2SC2758-U18
TP201
E201
Q301 TX-666-2
Q302 2SA1226-E3
Q303 2SC2758-U18
Q304 2SA1462-Y34
Q305 2SC2758-U18
TP301
E301
RV401:HIGH F-ADJ
RV402:MID F-ADJ
RV403:LOW F-ADJ
RV101:HIGH F-ADJ
RV102:MID F-ADJ
RV103:LOW F-ADJ
RV201:HIGH F-ADJ
RV202:MID F-ADJ
RV203:LOW F-ADJ
RV301:HIGH F-ADJ
RV302:MID F-ADJ
RV303:LOW F-ADJ
CN1 18p
D-AUD OUT (X) A1 AU. 2-19
D-AUD OUT (G) B1 AU. 2-20
R-CH OUT (X) A3 VA. 1-23
R-CH OUT (G) B3 VA. 1-22
B-CH OUT (X) A4 VA. 1-20
B-CH OUT (G) B4 VA. 1-19
G-CH OUT (X) A5 VA. 1-17
G-CH OUT (G) B5 VA. 1-16
KEY B2
TP3
R8 8.2k
C10 22 50V
-35V IN A6
-35V IN B6
PS228. 201-A5
TP1
RV1:+9V ADJ
IC1 TL062CPS
Q2 2SD773-4
Q1 2SB733-4
R1 10k
R5 8.2k
R7 2.7k
C3 0.1
Q1
C6 0.1
R3 22k
C1 100 16V
RV1 2k
C8 33 16V
D2 RD8.2ESL2
E1
R6 20k
D1 1SZ46A
C4 2.2 25V
L1
+9.5V IN A8
+9.5V IN B8
PS228. 201-A3/B3
GND A9
GND B9
PS228. 201-A2/B2
C2 100 16V
D3 RD8.2ESL2
C7 0.1
C9 33 16V
TP2
R4 22k
C5 0.1
R2 10k
Q2
L2
-9.5V IN A7
-9.5V IN B7
PS228. 201-A4/B4

ORX-11 BOARD
HDFR-300

VA-99 BOARD

Ser No.10001-10199

VA-99 (1-635-703-11)

CN1	A-5
D1	I-7
D2	I-7
D3	J-6
D4	G-7
D5	G-7
D6	D-6
D101	B-4
D102	B-5
D103	D-4
D104	F-5
D105	G-5
D106	K-5
D201	B-3
D202	B-3
D203	D-3
D204	F-3
D205	G-4
D206	K-6
D301	B-1
D302	B-2
D303	D-1
D304	F-2
D305	G-2
D306	K-6
D401	C-6
D402	K-4
D501	C-7
D502	K-3
E1	H-6
E2	F-5
E101	A-5
E102	F-5
E103	F-5
E201	A-3
E202	F-3
E203	F-3
E301	A-2
E302	F-2
E303	F-2
E401	D-6
E501	D-7
IC1	I-6
IC2	G-6
IC101	D-4
IC102	D-4
IC103	E-4
IC104	I-4
IC105	F-4
IC106	H-4
IC107	G-5
IC201	D-3
IC202	D-3
IC203	E-3
IC204	I-3
IC205	F-3
IC206	H-2
IC207	G-4
IC301	D-1
IC302	D-1
IC303	E-2
IC304	I-1
IC305	F-1
IC306	H-1
IC307	G-2
IC401	B-6
IC402	C-6
IC403	E-6
IC501	B-7
IC502	C-7
IC503	E-7
PH101	B-4
PH102	B-4
PH201	B-2
PH202	B-2
PH301	B-1
PH302	B-1
Q1	J-7
Q2	I-7
Q3	H-7
Q4	G-7
Q101	B-5
Q102	B-4
Q103	B-4
Q104	B-5
Q105	C-4
Q106	D-4
Q107	C-4
Q108	D-4
Q109	C-5
Q110	C-5
Q111	C-5
Q112	C-5
Q113	D-4
Q114	E-4
Q115	H-4
Q116	F-5
Q117	F-5
Q118	F-5
Q119	K-5
Q201	B-3
Q202	B-3
Q203	B-3
Q204	B-3
Q205	C-3
Q206	D-2
Q207	C-3
Q208	D-3
Q209	C-3
Q210	C-3
Q211	C-3
Q212	C-3
Q213	D-3
Q214	E-3
Q215	H-3
Q216	F-3
Q217	F-3
Q218	F-3
Q219	K-5
Q301	B-2
Q302	B-1
Q303	B-1
Q304	B-2
Q305	C-1
Q306	D-1
Q307	C-1
Q308	D-1
Q309	C-2
Q310	C-2
Q311	C-2
Q312	C-2
Q313	D-1
Q314	E-1
Q315	H-1
Q316	F-2
Q317	F-2
Q318	F-2
Q319	K-6
Q401	B-6
Q402	B-6
Q403	C-6
Q404	K-4
Q501	B-7
Q502	B-7
Q503	C-7
Q504	K-3
RV1	J-6
RV2	H-6
RV101	D-5
RV102	F-4
RV103	C-4
RV104	E-4
RV201	D-4
RV202	F-2
RV203	C-3
RV204	E-3
RV301	D-2
RV302	F-1
RV303	C-1
RV304	E-1
TP1	H-6
TP2	H-6
TP3	G-6
TP4	F-6
TP101	B-4
TP102	C-4
TP103	D-4
TP104	G-4
TP105	F-5
TP106	G-5
TP201	B-2
TP202	C-2
TP203	D-2
TP204	G-3
TP205	F-3
TP206	G-3
TP301	B-1
TP302	C-1
TP303	D-1
TP304	G-1
TP305	F-2
TP306	G-2
TP401	B-5
TP402	D-5
TP501	B-7
TP502	D-7

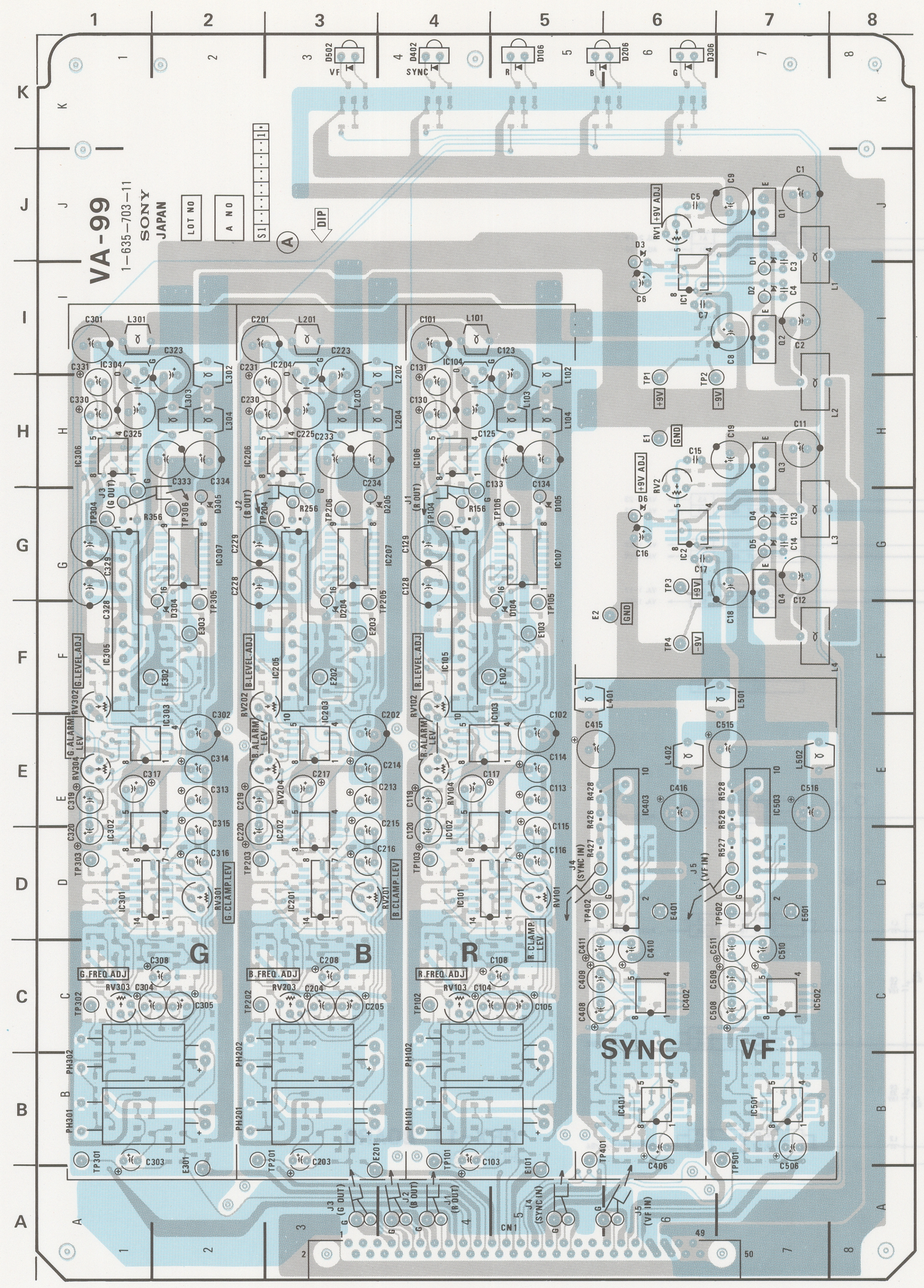

1-635-703-11 COMPONENT SIDE

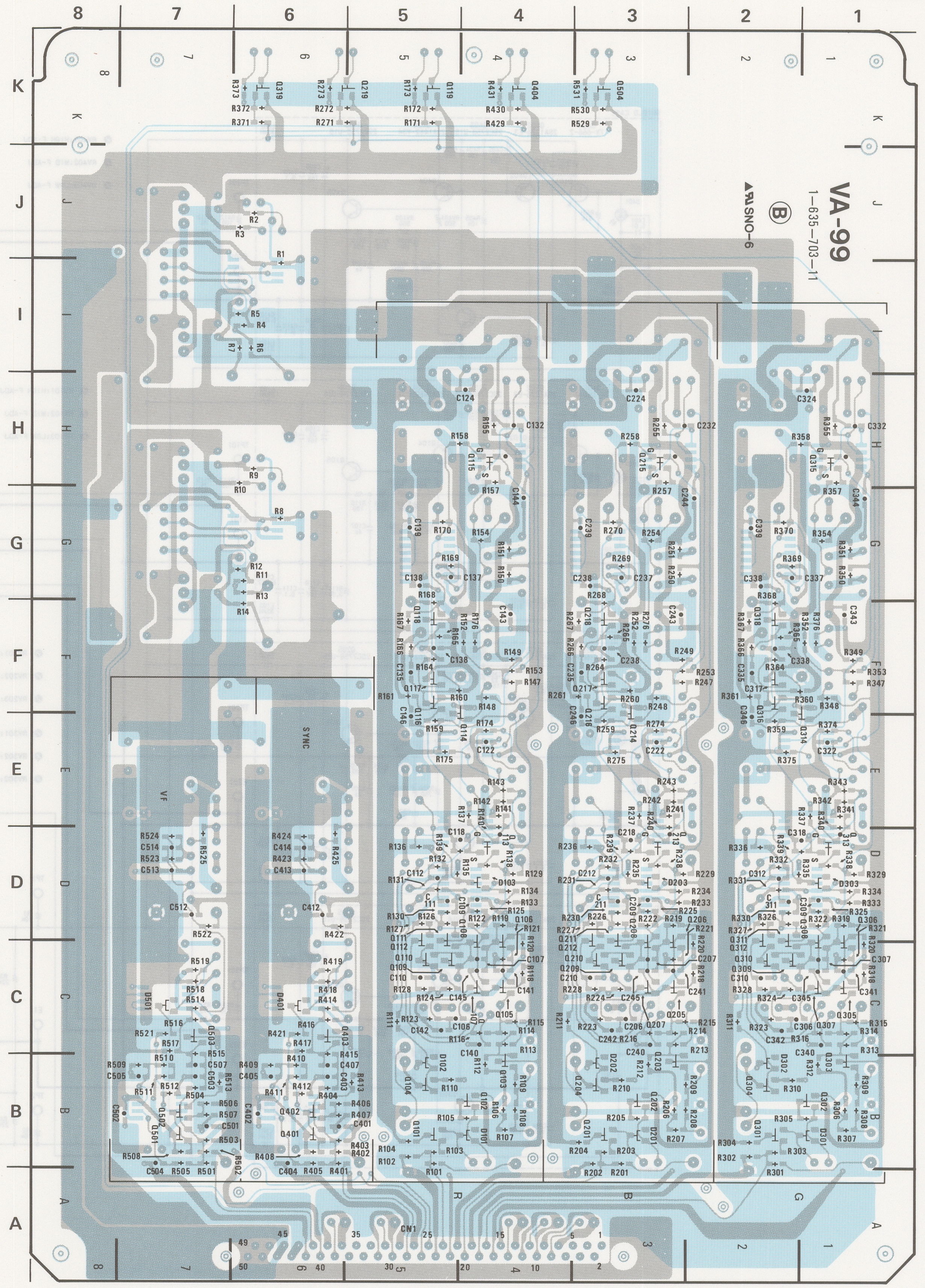

1-635-703-11 SOLDERING SIDE

VA-99 BOARD Ser No.10201-

VA-99 (1-635-703-12)

CN1	A-5
D1	I-7
D2	I-7
D3	J-6
D4	G-7
D5	G-7
D6	G-6
D101	B-4
D102	B-5
D103	D-4
D104	F-5
D105	G-5
D106	K-5
D201	B-3
D202	B-3
D203	D-3
D204	F-3
D205	G-4
D206	K-6
D301	B-1
D302	B-2
D303	D-1
D304	F-2
D305	G-2
D306	K-6
D401	C-6
D402	K-4
D501	C-7
D502	K-3
E1	H-6
E2	F-5
E101	A-5
E102	F-5
E103	F-5
E201	A-3
E202	F-3
E203	F-3
E301	A-2
E302	F-2
E303	F-2
E401	D-6
E501	D-7
IC1	I-6
IC2	G-6
IC101	D-4
IC102	D-4
IC103	E-4
IC104	I-4
IC105	F-4
IC106	H-4
IC107	G-5
IC201	D-3
IC202	D-3
IC203	E-3
IC204	I-3
IC205	F-3
IC206	H-2
IC207	G-4
IC301	D-1
IC302	D-1
IC303	E-2
IC304	I-1
IC305	F-1
IC306	H-1
IC307	G-2
IC401	B-6
IC402	C-6
IC403	E-6
IC501	B-7
IC502	C-7
IC503	E-7
PH101	B-4
PH102	B-4
PH201	B-2
PH202	B-2
PH301	B-1
PH302	B-1
Q1	J-7
Q2	I-7
Q3	H-7
Q4	G-7
Q101	B-5
Q102	B-4
Q103	B-4
Q104	B-5
Q105	C-4
Q106	D-4
Q107	C-4
Q108	D-4
Q109	C-5
Q110	C-5
Q111	C-5
Q112	C-5
Q113	D-4
Q114	E-4
Q115	H-4
Q116	F-5
Q117	F-5
Q118	F-5
Q119	K-5
Q201	B-3
Q202	B-3
Q203	B-3
Q204	B-3
Q205	C-3
Q206	D-2
Q207	C-3
Q208	D-3
Q209	C-3
Q210	C-3
Q211	C-3
Q212	C-3
Q213	D-3
Q214	E-3
Q215	H-3
Q216	F-3
Q217	F-3
Q218	F-3
Q219	K-5
Q301	B-2
Q302	B-1
Q303	B-1
Q304	B-2
Q305	C-1
Q306	D-1
Q307	C-1
Q308	D-1
Q309	C-2
Q310	C-2
Q311	C-2
Q312	C-2
Q313	D-1
Q314	E-1
Q315	H-1
Q316	F-2
Q317	F-2
Q318	F-2
Q319	K-6
Q401	B-6
Q402	B-6
Q403	C-6
Q404	K-4
Q501	B-7
Q502	B-7
Q503	C-7
Q504	K-3
RV1	J-6
RV2	H-6
RV101	D-5
RV102	F-4
RV103	C-4
RV104	E-4
RV201	D-4
RV202	F-2
RV203	C-3
RV204	E-3
RV301	D-2
RV302	F-1
RV303	C-1
RV304	E-1
TP1	H-6
TP2	H-6
TP3	G-6
TP4	F-6
TP101	B-4
TP102	C-4
TP103	D-4
TP104	G-4
TP105	F-5
TP106	G-5
TP201	B-2
TP202	C-2
TP203	D-2
TP204	G-3
TP205	F-3
TP206	G-3
TP301	B-1
TP302	C-1
TP303	D-1
TP304	G-1
TP305	F-2
TP306	G-2
TP401	B-5
TP402	D-5
TP501	B-7
TP502	D-7

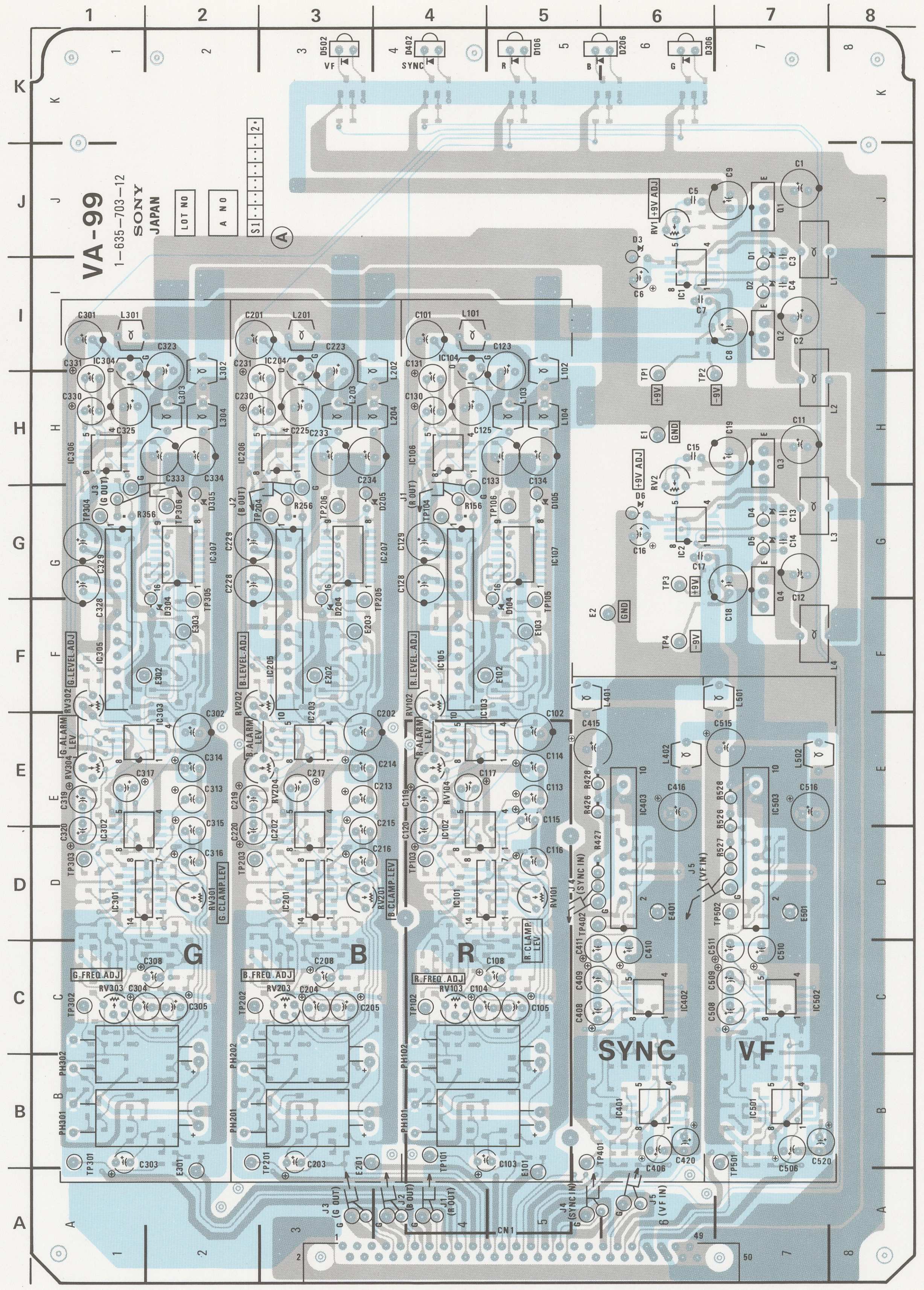

1-635-703-12 COMPONENT SIDE

1-635-703-12 SOLDERING SIDE

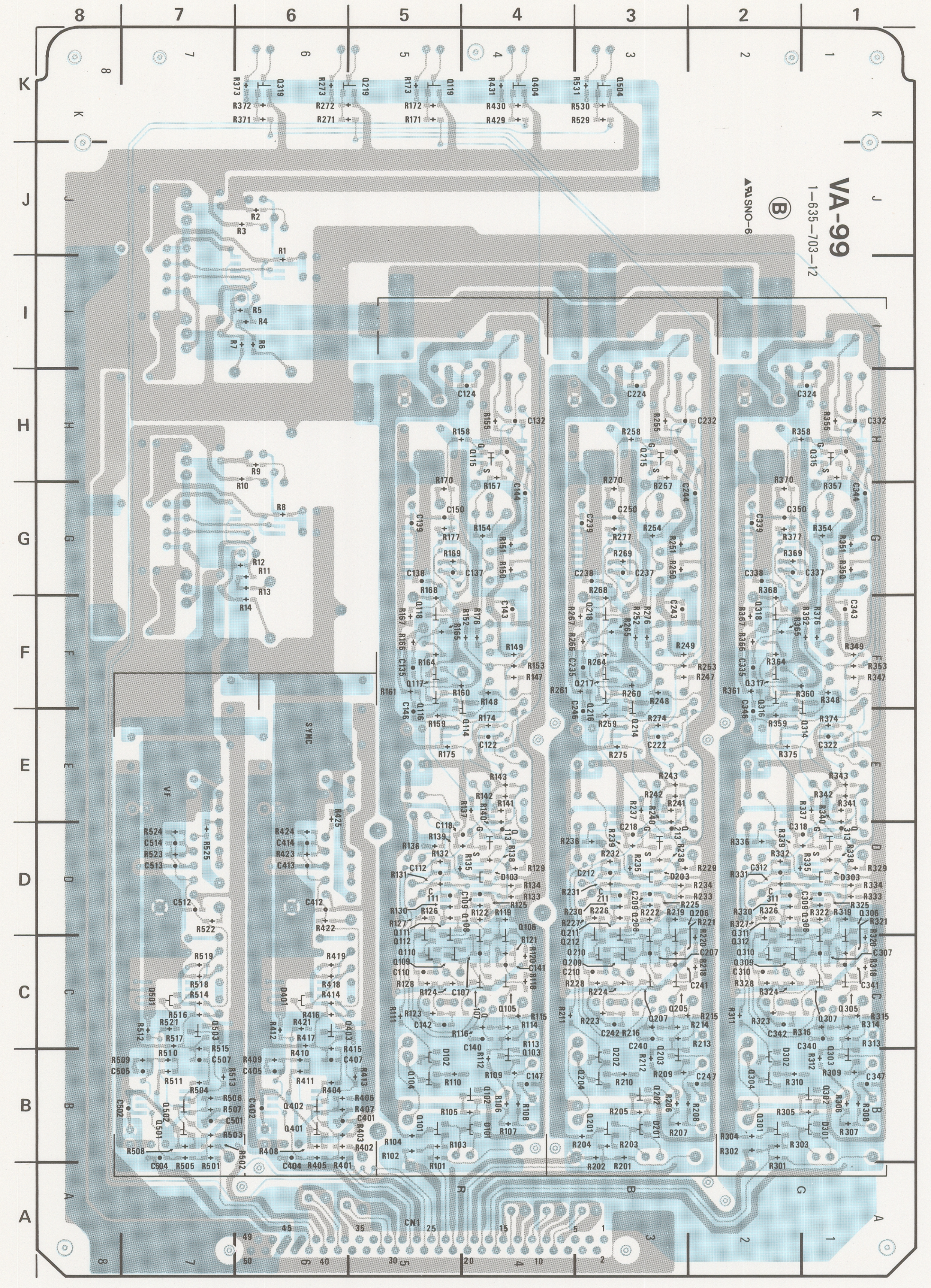

1-635-703-12 COMPONENT SIDE

1-635-703-12 SOLDERING SIDE

VA-99 BOARD
VIDEO LEVEL CONTROL
SYNC, VF AMPLIFIER

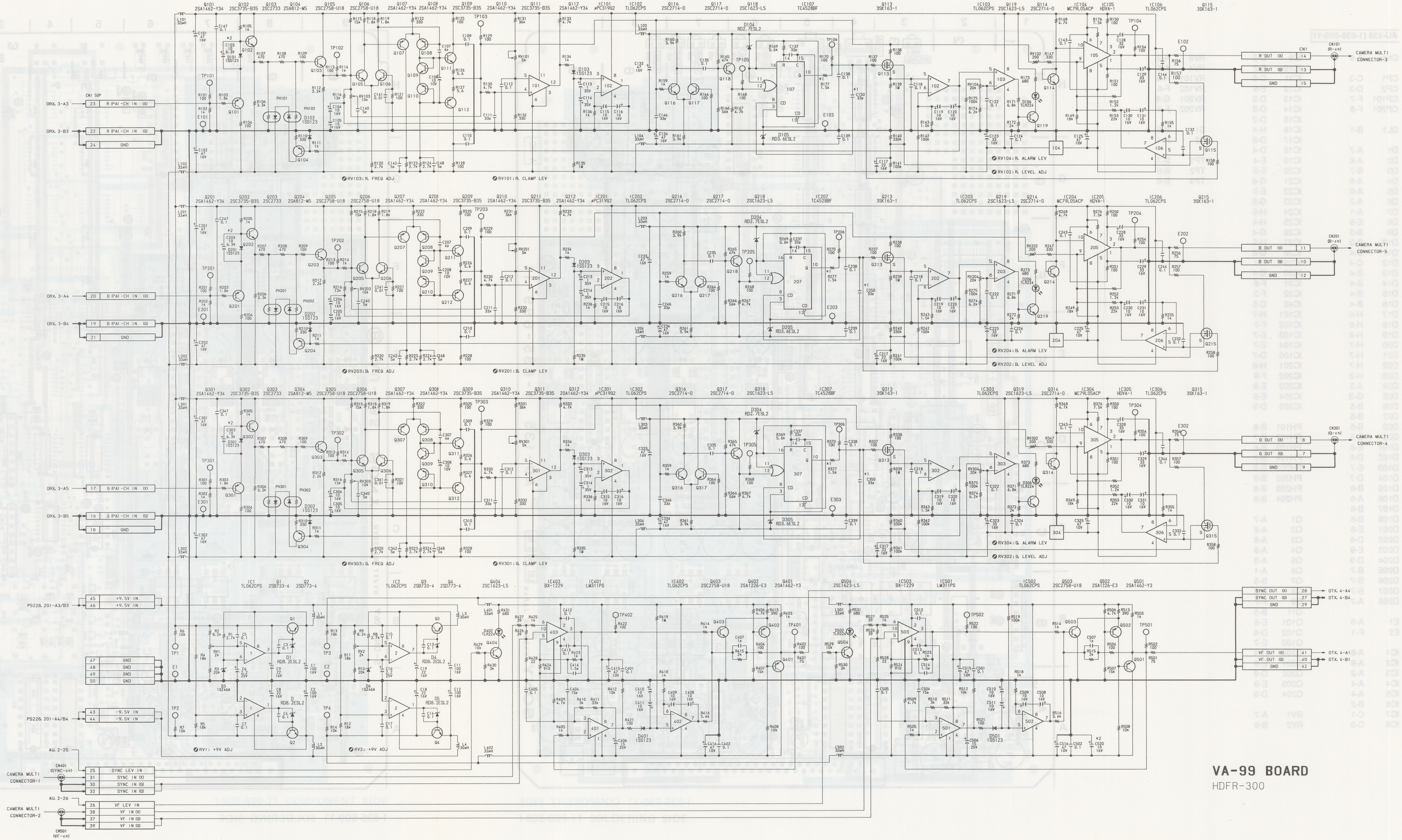
CN1 50P
ORX, 3-A3 23 R (PA)-CH IN (X)
ORX, 3-B3 22 R (PA)-CH IN (G)
24 GND
ORX, 3-A4 20 B (PA)-CH IN (X)
ORX, 3-B4 19 B (PA)-CH IN (G)
21 GND
ORX, 3-A5 17 G (PA)-CH IN (X)
ORX, 3-B5 16 G (PA)-CH IN (G)
18 GND
PS228, 201-A3/B3 45 +9.5V IN 46 +9.5V IN
47 GND 48 GND 49 GND 50 GND
PS228, 201-A4/B4 43 -9.5V IN 44 -9.5V IN
AU, 2-25
CN401 (SYNC-ch)
CAMERA MULTI CONNECTOR-1
25 SYNC LEV IN
31 SYNC IN (X)
30 SYNC IN (G)
32 SYNC IN (G)
AU, 2-26
CAMERA MULTI CONNECTOR-2
26 VF LEV IN
38 VF IN (X)
37 VF IN (G)
39 VF IN (G)
CN501 (VF-ch)
R OUT (X) 14
R OUT (G) 13
GND 15
CN101 (R-ch)
CAMERA MULTI CONNECTOR-3
B OUT (X) 11
B OUT (G) 10
GND 12
CN201 (B-ch)
CAMERA MULTI CONNECTOR-5
G OUT (X) 8
G OUT (G) 7
GND 9
CN301 (G-ch)
CAMERA MULTI CONNECTOR-4
SYNC OUT (X) 28 OTX, 4-A4
SYNC OUT (G) 27 OTX, 4-B4
GND 29
VF OUT (X) 41 OTX, 4-A1
VF OUT (G) 40 OTX, 4-B1
GND 42
RV103: R. FREQ ADJ
RV101: R. CLAMP LEV
RV104: R. ALARM LEV
RV102: R. LEVEL ADJ
RV203: B. FREQ ADJ
RV201: B. CLAMP LEV
RV204: B. ALARM LEV
RV202: B. LEVEL ADJ
RV303: G. FREQ ADJ
RV301: G. CLAMP LEV
RV304: G. ALARM LEV
RV302: G. LEVEL ADJ
RV1: +9V ADJ
RV2: -9V ADJ

*NOTE

MARK	ADDRESS	CHANGE INFORMATION	SERIAL. NO
*1	G-1	C150 33P ADD R177 1.5K ADD	10101-
	G-2	C250 33P ADD R277 1.5K ADD	
	G-3	C350 33P ADD R377 1.5K ADD	
*2	H-5	C520 10/16V ADD	10201-
	C-1	C103 DELETE	
	C-2	C203 DELETE	
	C-3	C303 DELETE	

VA-99 BOARD
HDFR-300

AU-135 BOARD

Ser No.10001-10199

AU-135 (1-635-699-11)

CN1	A-5
CP1	C-3
CP2	D-3
CP101	F-7
CP201	F-8
DL1	B-1
D1	A-7
D2	A-8
D3	B-7
D4	A-8
D5	A-9
D6	A-2
D7	A-1
D8	E-5
D9	B-3
D10	B-3
D11	B-4
D12	C-4
D13	B-4
D14	B-4
D15	B-4
D16	B-4
D17	H-6
D18	H-6
D19	H-8
D20	H-7
D21	H-7
D22	H-7
D23	H-3
D24	A-3
D25	G-3
D26	B-5
D27	B-5
D28	B-5
D29	B-5
D101	E-6
D102	D-6
D103	E-7
D104	D-7
D105	B-6
D106	A-6
D107	B-6
D108	B-6
D201	E-8
D202	D-8
D203	E-9
D204	D-9
D205	B-7
D206	B-7
D207	B-7
D208	A-7
E1	A-9
E2	F-1
IC1	A-8
IC2	A-9
IC3	A-2
IC4	A-4
IC5	A-4
IC6	B-2
IC7	C-1
IC8	C-3
IC9	C-2
IC10	E-2
IC11	C-5
IC12	E-5
IC13	D-3
IC14	D-3
IC15	D-2
IC16	H-4
IC17	D-5
IC18	D-4
IC19	E-4
IC20	E-5
IC21	G-6
IC22	E-3
IC23	G-5
IC24	H-5
IC25	H-4
IC26	G-4
IC27	H-5
IC28	G-6
IC29	F-1
IC30	C-4
IC31	F-8
IC32	F-3
IC40	C-5
IC101	H-7
IC102	F-7
IC103	E-7
IC104	E-7
IC105	D-7
IC201	H-8
IC202	F-9
IC203	E-9
IC204	E-9
IC205	D-9
PH101	B-6
PH102	B-7
PH103	B-6
PH104	B-7
PH201	B-8
PH202	B-9
PH203	B-8
PH204	B-9
Q1	A-7
Q2	A-8
Q3	A-8
Q4	A-9
Q5	A-3
Q6	A-1
Q7	B-5
Q8	B-6
Q9	F-7
Q11	B-5
Q101	E-6
Q102	D-6
Q103	E-7
Q104	D-4
Q201	E-8
Q202	D-8
Q203	E-9
Q204	D-9
RV1	A-7
RV2	B-9
RV3	A-2
RV4	A-5
RV101	H-8
RV102	F-6
RV201	G-9
RV202	F-9
S1	H-5
S2	H-4
TP1	B-7
TP2	B-8
TP3	B-8

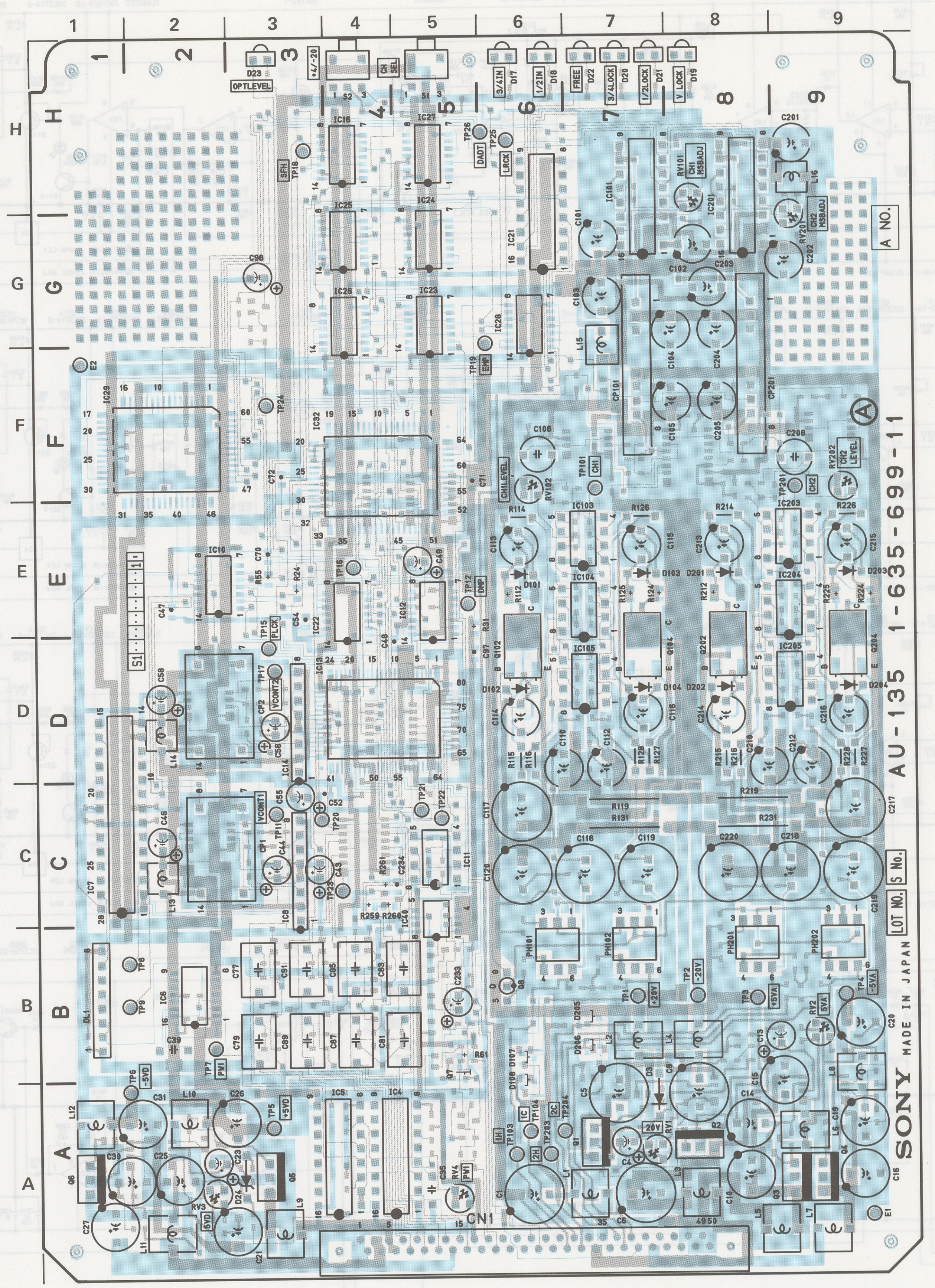

1-635-699-11 COMPONENT SIDE

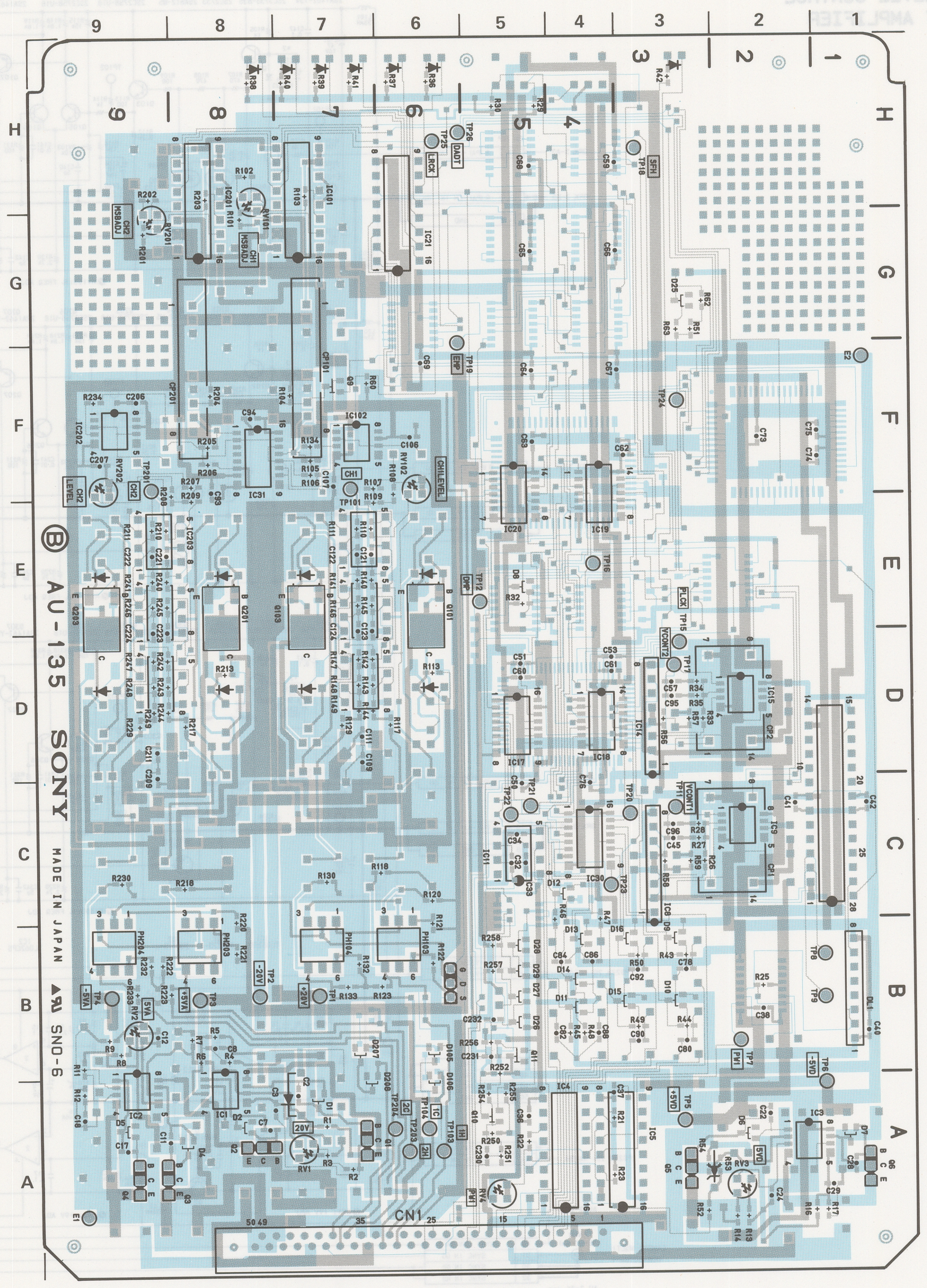

1-635-699-11 SOLDERING SIDE

AU-135 BOARD

Ser No.10201-

AU-135 (1-635-699-12)

CN1	A-5
CP1	C-3
CP2	D-3
CP101	F-7
CP201	F-8
DL1	B-1
D1	A-7
D2	A-8
D3	B-7
D4	A-8
D5	A-9
D6	A-2
D7	A-1
D8	E-5
D9	B-3
D10	B-3
D11	B-4
D12	C-4
D13	B-4
D14	B-4
D15	B-4
D16	B-4
D17	H-6
D18	H-6
D19	H-8
D20	H-7
D21	H-7
D22	H-7
D23	H-3
D24	A-3
D25	G-3
D26	B-5
D27	B-5
D28	B-5
D29	B-5
D101	E-6
D102	D-6
D103	E-7
D104	D-7
D105	B-6
D106	A-6
D107	B-6
D108	B-6
D201	E-8
D202	D-8
D203	E-9
D204	D-9
D205	B-7
D206	B-7
D207	B-7
D208	A-7
E1	A-9
E2	F-1
IC1	A-8
IC2	A-9
IC3	A-2
IC4	A-4
IC5	A-4
IC6	B-2
IC7	C-1
IC8	C-3
IC9	C-2
IC10	E-2
IC11	C-5
IC12	E-5
IC13	D-3
IC14	D-3
IC15	D-2
IC16	H-4
IC17	D-5
IC18	D-4
IC19	E-4
IC20	E-5
IC21	G-6
IC22	E-3
IC23	G-5
IC24	H-5
IC25	H-4
IC26	G-4
IC27	H-5
IC28	G-6
IC29	F-1
IC30	C-4
IC31	F-8
IC32	F-3
IC33	E-1
IC40	C-5
IC101	H-7
IC102	F-7
IC103	E-7
IC104	E-7
IC105	D-7
IC201	H-8
IC202	F-9
IC203	E-9
IC204	E-9
IC205	D-9
PH101	B-6
PH102	B-7
PH103	B-6
PH104	B-7
PH201	B-8
PH202	B-9
PH203	B-8
PH204	B-9
Q1	A-7
Q2	A-8
Q3	A-9
Q4	A-9
Q5	A-3
Q6	A-1
Q7	B-5
Q8	B-6
Q9	F-7
Q10	A-5
Q11	B-5
Q101	E-6
Q102	D-6
Q103	E-7
Q104	D-7
Q201	E-8
Q202	D-8
Q203	E-9
Q204	D-9
RV1	A-7
RV2	B-9
RV3	A-2
RV4	A-5
RV101	H-8
RV102	F-6
RV201	G-9
RV202	F-9
S1	H-5
S2	H-4
TP1	B-7
TP2	B-8
TP3	B-8
TP4	B-9
TP5	A-3
TP6	B-1
TP7	B-2
TP8	B-2
TP9	B-2
TP11	C-3
TP12	E-5
TP15	E-3
TP16	E-4
TP17	D-3
TP18	H-3
TP19	F-5
TP20	C-4
TP21	C-5
TP22	C-5
TP23	C-3
TP24	F-3
TP25	H-6
TP26	H-5
TP101	F-7
TP103	A-6
TP104	A-6
TP201	F-9
TP203	A-6
TP204	A-6

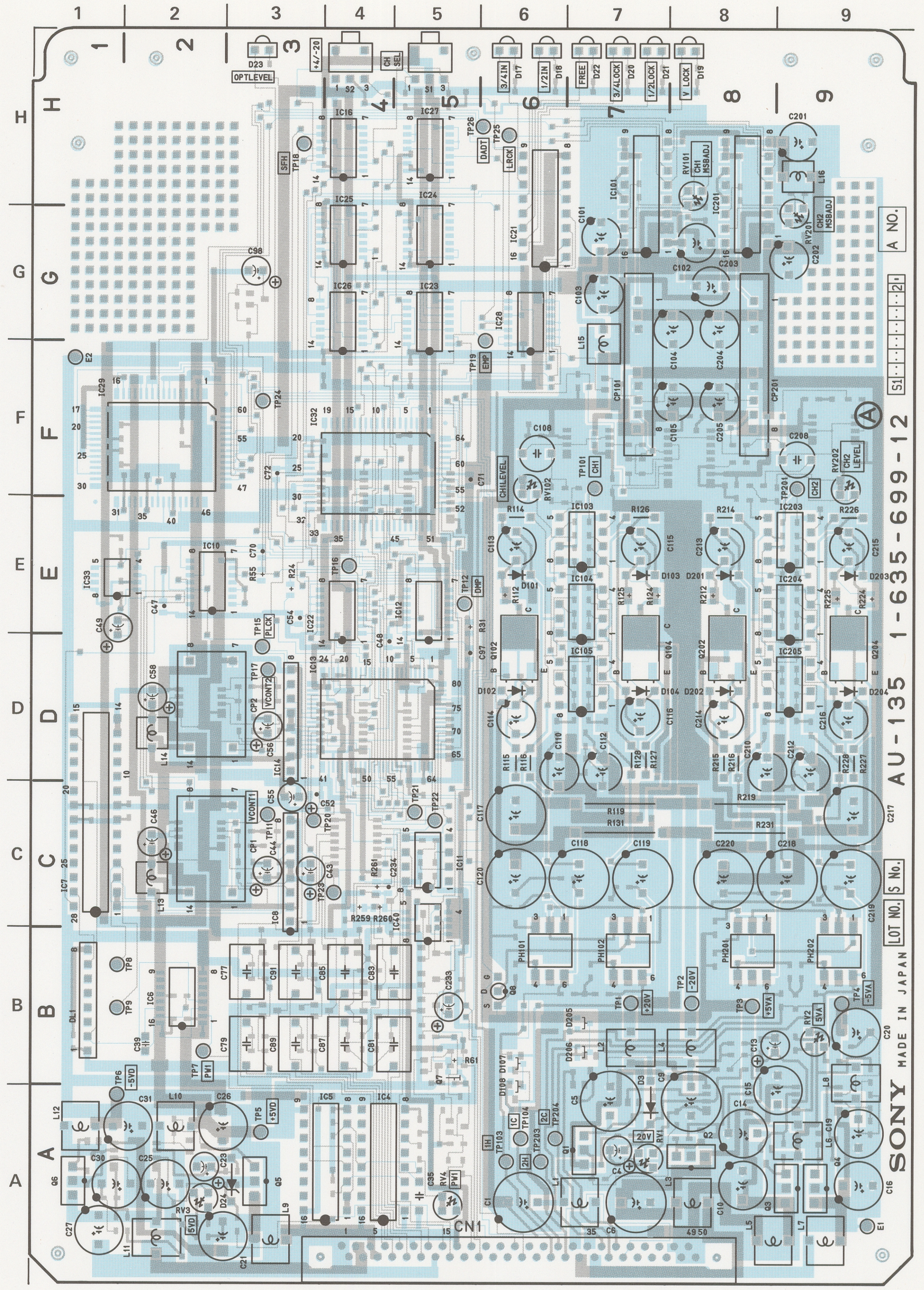

1-635-699-12 COMPONENT SIDE

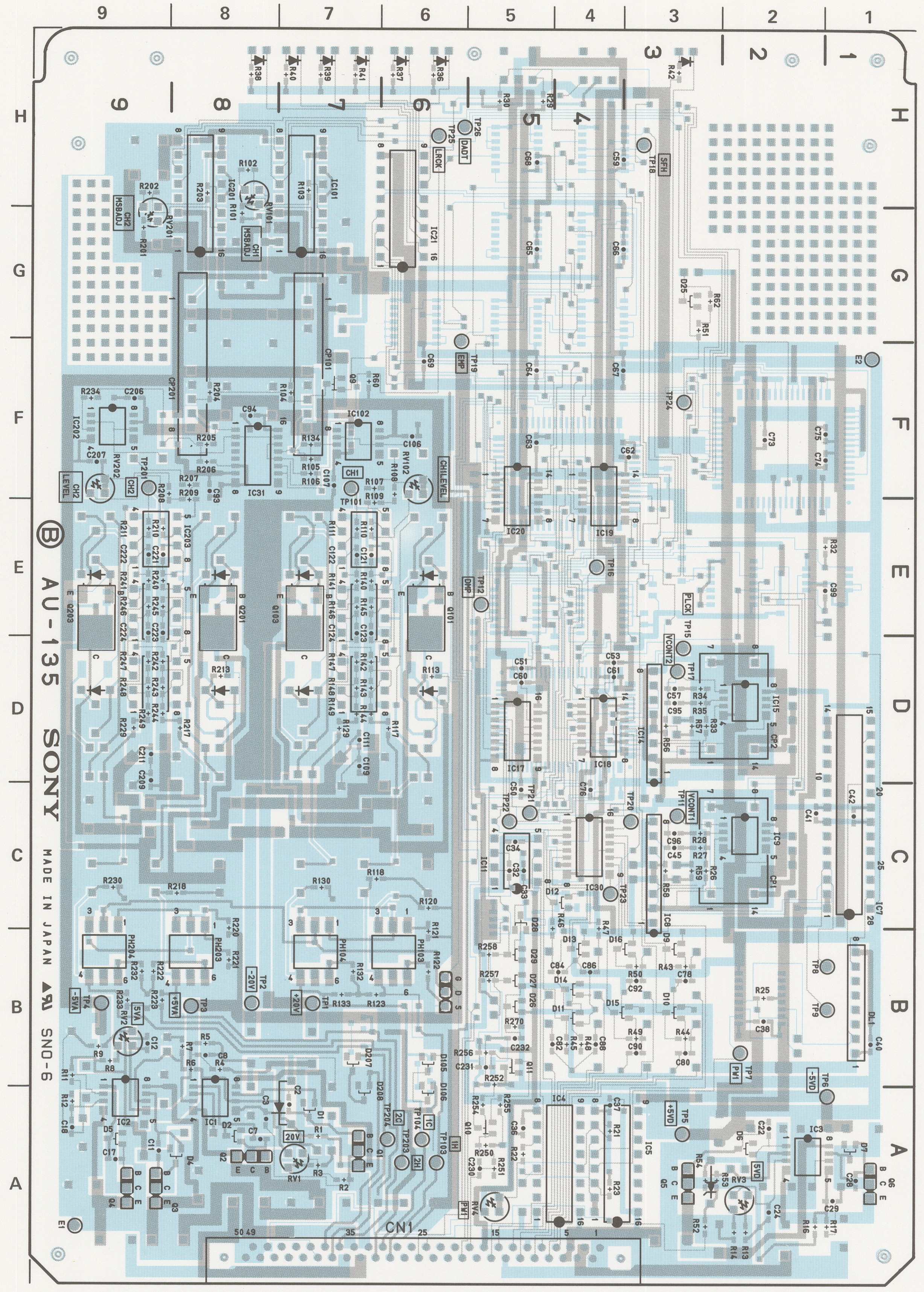

1-635-699-12 SOLDERING SIDE

AU-135 BOARD

AUDIO D/A CONVERTER
DIGITAL AUDIO DECODER

D AUD IN
D AUD IN 60
AUDIO OUT CHANNEL
ANALOG AUDIO OUT LEVEL
ANALOG
SYNC LEVEL OUT
RF LEVEL OUT
SELECT 1 OUT
SELECT 2 OUT
D-AUD 3/4 OUT
D-AUD 1/2 OUT
D-AUD 5/6 OUT
MUTE IN
+20V
-20V
+5V
-5V
1
2
3
4
5

*NOTE

MARK	ADDRESS	CHANGE INFORMATION	SERIAL.NO
*1	D-1	IC7 EPM5032DC-AU → EPM5032DC-AU2	10101-
*2	O-4	C77 C79 } 0.22 DELETE	10201-
	F-2	C99 0.1 ADD IC33 TL7705ACPS ADD R32 1M → 10K	

AU-135 BOARD
HDFR-300

OTX-11 BOARD Ser No.10001-10100

OTX-11 (1-635-697-11)

CN1	I-3
D1	I-3
D2	H-3
D3	I-2
D101	C-4
D102	D-3
D103	D-3
D104	D-3
D105	D-4
D106	E-4
D201	C-2
D202	D-2
D203	D-2
D204	D-2
D205	D-2
D206	E-2
E1	I-4
E101	D-4
E201	H-1
IC1	H-2
IC101	F-4
IC201	F-2
Q1	H-3
Q2	H-3
Q101	F-3
Q102	F-3
Q201	F-1
Q202	F-1
RV1	H-2
RV101	E-4
RV102	E-4
RV201	E-2
RV202	E-2
TH101	E-3
TH201	E-1
TP1	H-4
TP2	H-4
TP101	G-4
TP102	C-4
TP201	G-1
TP202	F-1

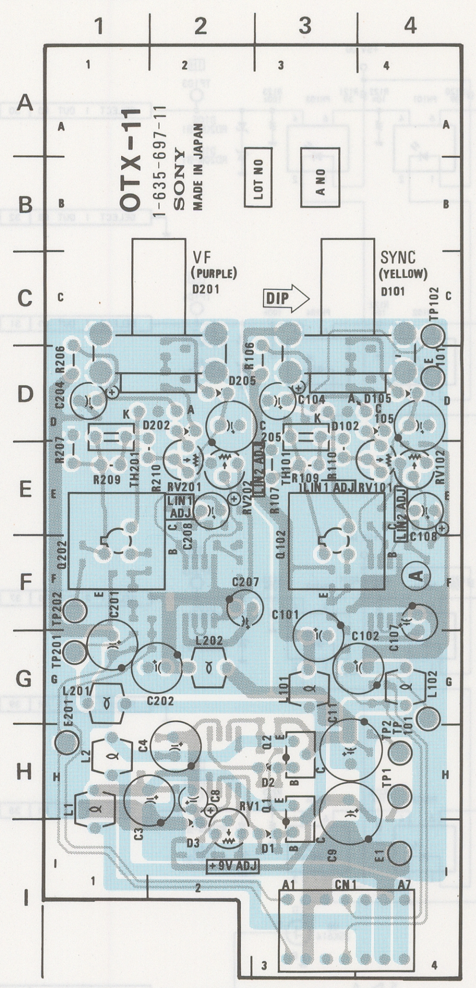
1
2
3
4
A
B
C
D
E
F
G
H
I
OTX-11
1-635-697-11
SONY
MADE IN JAPAN
VF (PURPLE)
SYNC (YELLOW)
DIP

1-635-697-11 COMPONENT SIDE

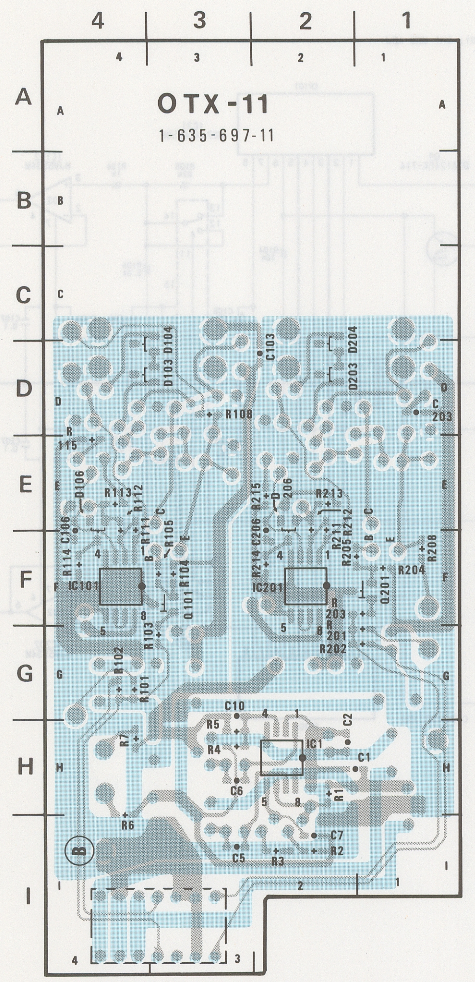
4
3
2
1
A
B
C
D
E
F
G
H
I
OTX-11
1-635-697-11

1-635-697-11 SOLDERING SIDE

OTX-11 BOARD Ser No.10101-

OTX-11 (1-635-697-12)

CN1	I-3
D1	I-3
D2	H-3
D3	I-2
D101	C-4
D102	D-4
D103	D-3
D104	D-3
D105	D-4
D106	E-4
D201	C-2
D202	D-2
D203	D-2
D204	D-2
D205	D-2
D206	E-2
E1	I-4
E101	D-4
E201	H-1
IC1	H-2
IC101	F-4
IC201	F-2
Q1	H-3
Q2	H-3
Q101	F-3
Q102	F-3
Q201	F-1
Q202	F-1
RV1	H-2
RV101	E-4
RV102	E-4
RV201	E-2
RV202	E-2
TH101	E-3
TH201	E-1
TP1	H-4
TP2	H-4
TP101	G-4
TP102	C-4
TP201	G-1
TP202	F-1

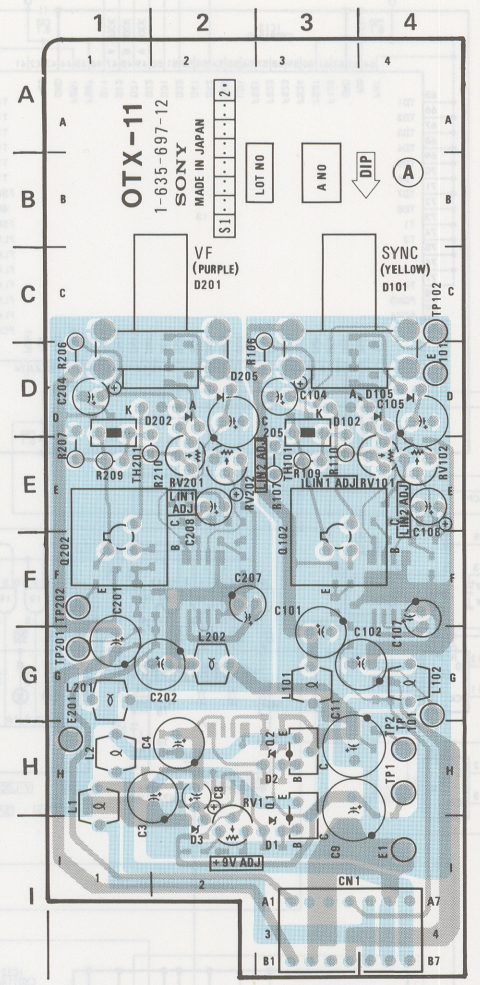
1
2
3
4
A
B
C
D
E
F
G
H
I
OTX-11
1-635-697-12
SONY
MADE IN JAPAN
VF (PURPLE)
SYNC (YELLOW)
DIP
Ⓐ

1-635-697-12 COMPONENT SIDE

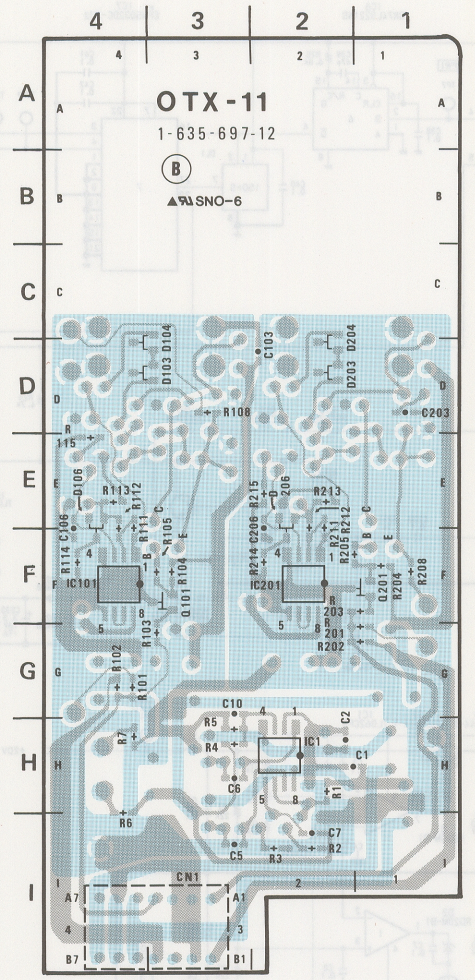
4
3
2
1
A
B
C
D
E
F
G
H
I
OTX-11
1-635-697-12
Ⓑ

1-635-697-12 SOLDERING SIDE

OTX-11 BOARD

OPTICAL TRANSMITTER

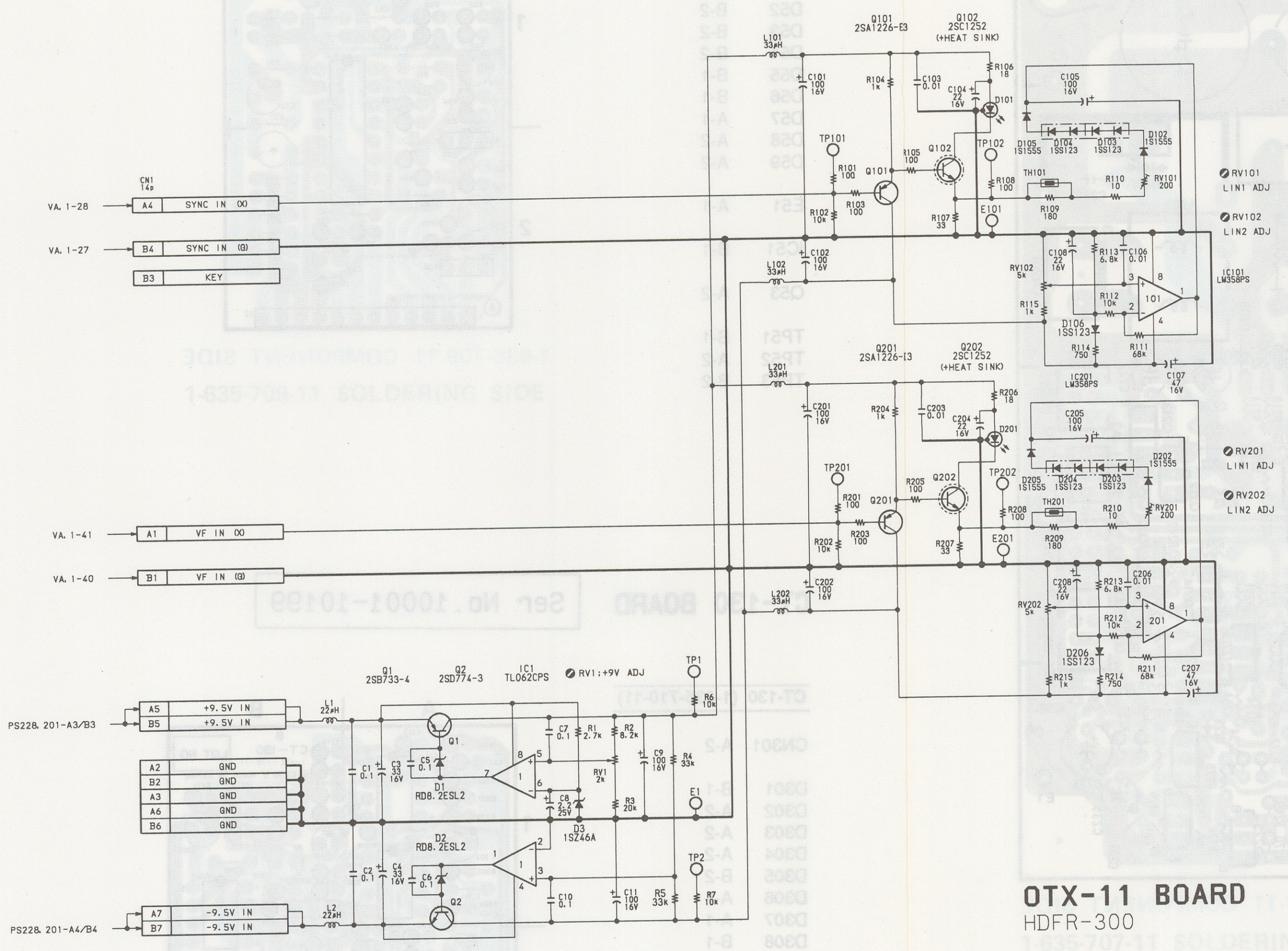
CN1
14p
VA. 1-28
A4
SYNC IN (X)
VA. 1-27
B4
SYNC IN (G)
B3
KEY
VA. 1-41
A1
VF IN (X)
VA. 1-40
B1
VF IN (G)
PS228, 201-A3/B3
A5
+9.5V IN
B5
+9.5V IN
A2
GND
B2
GND
A3
GND
A6
GND
B6
GND
PS228, 201-A4/B4
A7
-9.5V IN
B7
-9.5V IN
Q1
2SB733-4
Q2
2SD774-3
IC1
TL062CPS
RV1;+9V ADJ
L1
22μH
L2
22μH
C1
0.1
C2
0.1
C3
33
16V
C4
33
16V
C5
0.1
C6
0.1
D1
RD8.2ESL2
D2
RD8.2ESL2
C7
0.1
R1
2.7k
R2
8.2k
RV1
2k
C8
2.2
25V
D3
1SZ46A
R3
20k
C9
100
16V
R4
33k
C10
0.1
C11
100
16V
R5
33k
TP1
R6
10k
E1
TP2
R7
10k
L101
33μH
L102
33μH
L201
33μH
L202
33μH
Q101
2SA1226-E3
Q102
2SC1252
(+HEAT SINK)
C101
100
16V
C102
100
16V
R104
1k
C103
0.01
C104
22
16V
R106
18
D101
TP101
TP102
R101
100
R102
10k
R103
100
R105
100
R107
33
R108
100
E101
C105
100
16V
D105
1S1555
D104
1SS123
D103
1SS123
D102
1S1555
TH101
R109
180
R110
10
RV101
200
RV101
LIN1 ADJ
RV102
LIN2 ADJ
C108
22
16V
R113
6.8k
C106
0.01
RV102
5k
R115
1k
R112
10k
D106
1SS123
R114
750
R111
68k
IC101
LM358PS
101
IC201
LM358PS
C107
47
16V
Q201
2SA1226-E3
Q202
2SC1252
(+HEAT SINK)
C201
100
16V
C202
100
16V
R204
1k
C203
0.01
C204
22
16V
R206
18
D201
TP201
TP202
R201
100
R202
10k
R203
100
R205
100
R207
33
R208
100
E201
C205
100
16V
D205
1S1555
D204
1SS123
D203
1SS123
D202
1S1555
TH201
R209
180
R210
10
RV201
200
RV201
LIN1 ADJ
RV202
LIN2 ADJ
C208
22
16V
R213
6.8k
C206
0.01
RV202
5k
R215
1k
R212
10k
D206
1SS123
R214
750
R211
68k
201
C207
47
16V

OTX-11 BOARD

HDFR-300

PS-227 BOARD Ser No.10001-10199

PS-227 (1-635-707-11)

CN101	A-1
CN102	A-1
CN103	A-1
CN201	F-1
CN202	F-2
CN203	F-2
CN204	F-2
CN205	F-2
CN207	D-1
CT129	D-2
CT130	D-3
D101	A-1
D102	C-2
D103	C-3
D201	C-1
D202	C-1
D203	C-1
D204	C-1
D205	D-1
D206	E-1
D207	F-1
D208	F-1
D209	F-2
D210	F-1
D214	F-3
D215	E-2
D216	F-2
D217	D-2
D218	D-3
D219	D-3
D220	D-3
D221	F-2
D222	F-2
D223	D-1
D224	D-1
D225	D-2
D226	D-2
D227	F-3
D228	F-3
D229	F-2
D230	F-3
D232	F-3
D233	F-3
D234	F-3
E1	F-3
E2	E-1
E3	E-3
F101	A-1
IC201	E-2
IC202	E-1
PS201	D-1
Q101	C-2
Q102	C-3
Q103	C-2
Q104	C-3
Q201	F-2
Q202	E-1
Q203	E-1
Q204	E-2
Q205	E-2
Q206	D-2
Q207	D-3
Q208	E-3
Q209	E-3
Q210	E-1
Q212	F-2
Q213	F-2
Q214	F-2
Q215	F-2
Q216	F-2
Q217	F-3
Q218	F-3
Q219	E-3
Q220	E-2
Q221	F-2
Q222	E-3
Q223	F-3
Q224	E-3
Q225	E-3
Q226	F-3
S201	E-2
S202	E-3
TP21	D-3
TP22	E-3
TP23	E-2
TP24	D-2
TP25	D-1
T101	C-1
T102	C-2
T103	C-2
T104	C-3
T201	D-1
VZ101	A-1

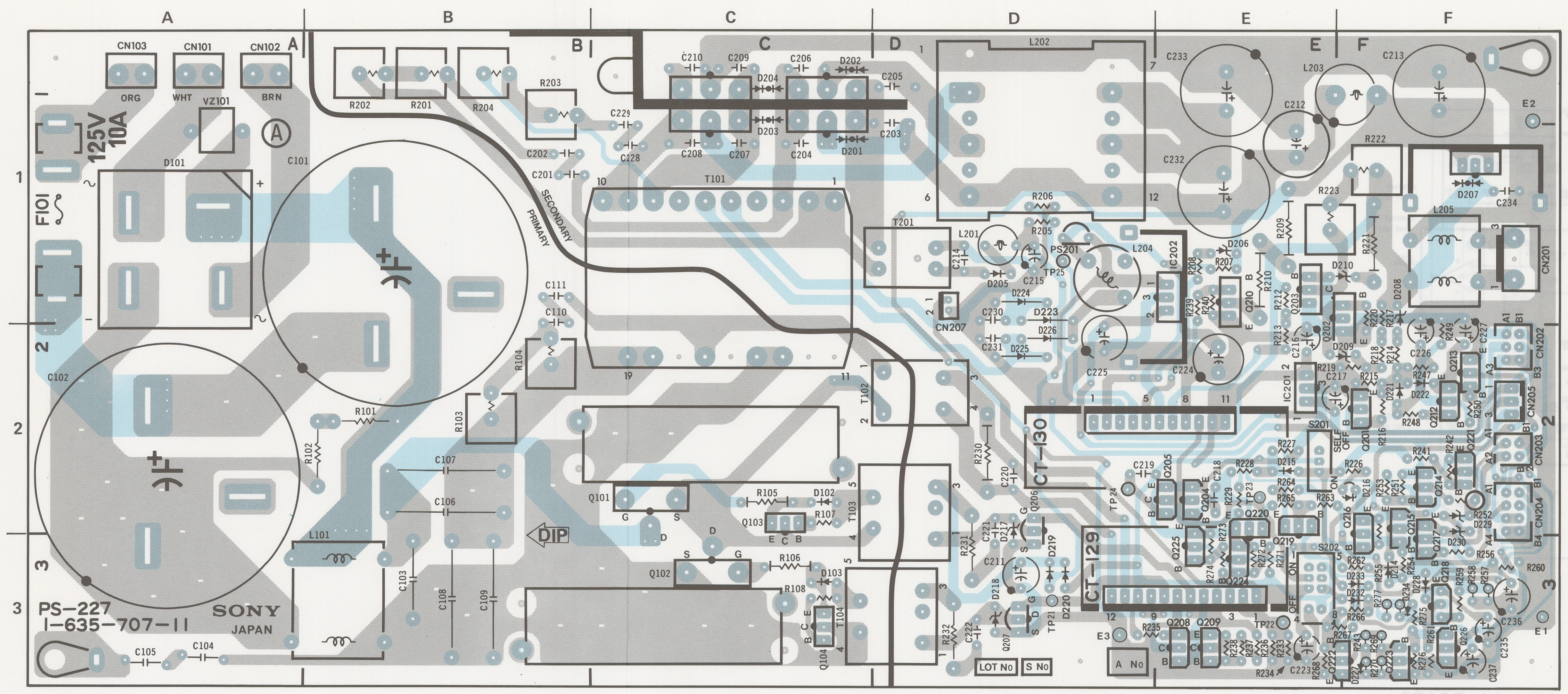
A
B
C
D
E
F
1
2
3
CN103
CN101
CN102
ORG
WHT
BRN
VZ101
125V 10A
F101
D101
C101
C102
SECONDARY
PRIMARY
T101
L202
L203
L204
L205
PS201
CN201
CN202
CN203
CN204
CN205
CN207
T201
T102
T103
T104
Q101
Q102
Q103
Q104
L101
DIP
CT-130
CT-129
IC201
IC202
S201
S202
PS-227
1-635-707-11
SONY
JAPAN
LOT No
S No
A No
E1
E2
E3

1-635-707-11 COMPONENT SIDE

1-635-707-11 SOLDERING SIDE

CT-129 BOARD Ser No.10001-10199

CT-129 (1-635-709-11)

CN51	A-2
D51	B-2
D52	B-2
D53	B-2
D54	B-2
D55	B-1
D56	B-1
D57	A-1
D58	A-2
D59	A-2
E51	A-1
IC51	B-1
Q53	A-2
TP51	B-1
TP52	A-2
TP53	B-2

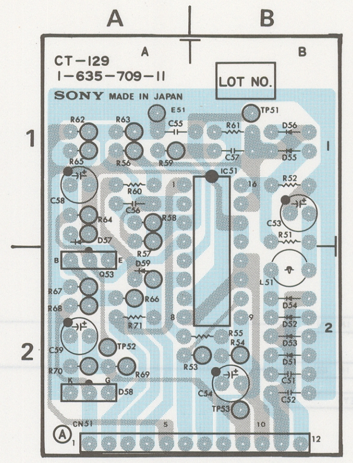
A
B
1
2
CT-129
1-635-709-11
SONY MADE IN JAPAN
LOT NO.

1-635-709-11 COMPONENT SIDE

1-635-709-11 SOLDERING SIDE

CT-130 BOARD Ser No.10001-10199

CT-130 (1-635-710-11)

CN301	A-2
D301	B-1
D302	A-2
D303	A-2
D304	A-2
D305	B-2
D306	A-1
D307	A-1
D308	B-1
D309	B-2
E301	B-2
IC301	A-1
IC302	A-2
IC303	A-2
IC304	A-1
IC305	B-1
Q301	B-1
Q302	B-2
Q303	B-2
TP301	B-2
TP302	B-1
TP303	A-1
TP304	A-1

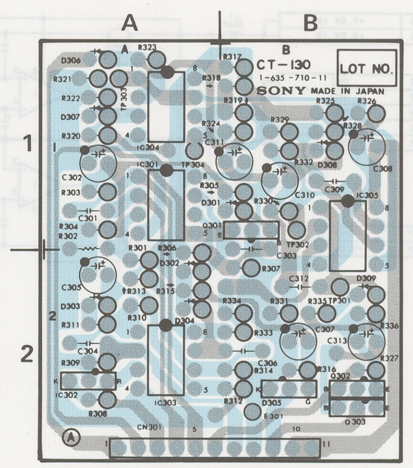
A
B
1
2
CT-130
1-635-710-11
SONY MADE IN JAPAN
LOT NO

1-635-710-11 COMPONENT SIDE

1-635-710-11 SOLDERING SIDE

PS-227 BOARD Ser No.10201-

PS-227 (1-635-707-12)

CN101	A-1
CN102	A-1
CN103	A-1
CN201	F-1
CN202	F-2
CN203	F-2
CN204	F-2
CN205	F-2
CN207	D-1
CT129	D-3
CT130	D-2
D101	A-1
D102	C-2
D103	C-3
D201	C-1
D202	C-1
D203	C-1
D204	C-1
D205	D-1
D206	E-1
D207	F-1
D208	F-1
D209	F-2
D210	F-1
D214	F-2
D215	E-2
D216	F-2
D217	D-2
D218	D-3
D219	D-3
D220	D-3
D221	F-2
D222	F-2
D223	D-1
D224	D-1
D225	D-2
D226	D-2
D227	F-3
D228	F-3
D229	F-2
D230	F-3
D232	F-3
D233	F-3
D234	F-3
D235	F-3
E1	F-3
E2	E-1
E3	E-3
F101	A-1
F102	A-1
IC201	E-2
IC202	E-1
PS201	D-1
Q101	C-2
Q102	C-3
Q103	C-2
Q104	C-3
Q201	F-2
Q202	E-1
Q203	E-1
Q204	E-2
Q205	E-2
Q206	D-2
Q207	D-3
Q208	E-3
Q209	E-3
Q210	E-1
Q212	F-2
Q213	F-2
Q214	F-2
Q215	F-2
Q216	F-2
Q217	F-3
Q218	F-3
Q219	E-3
Q220	E-2
Q221	F-2
Q222	E-3
Q223	F-3
Q224	E-3
Q225	E-3
Q226	F-3
S201	E-2
S202	E-3
TP21	D-3
TP22	E-3
TP23	E-2
TP24	D-2
TP25	D-1
T101	C-1
T102	C-2
T103	C-2
T104	C-3
T201	D-1
VZ101	A-1

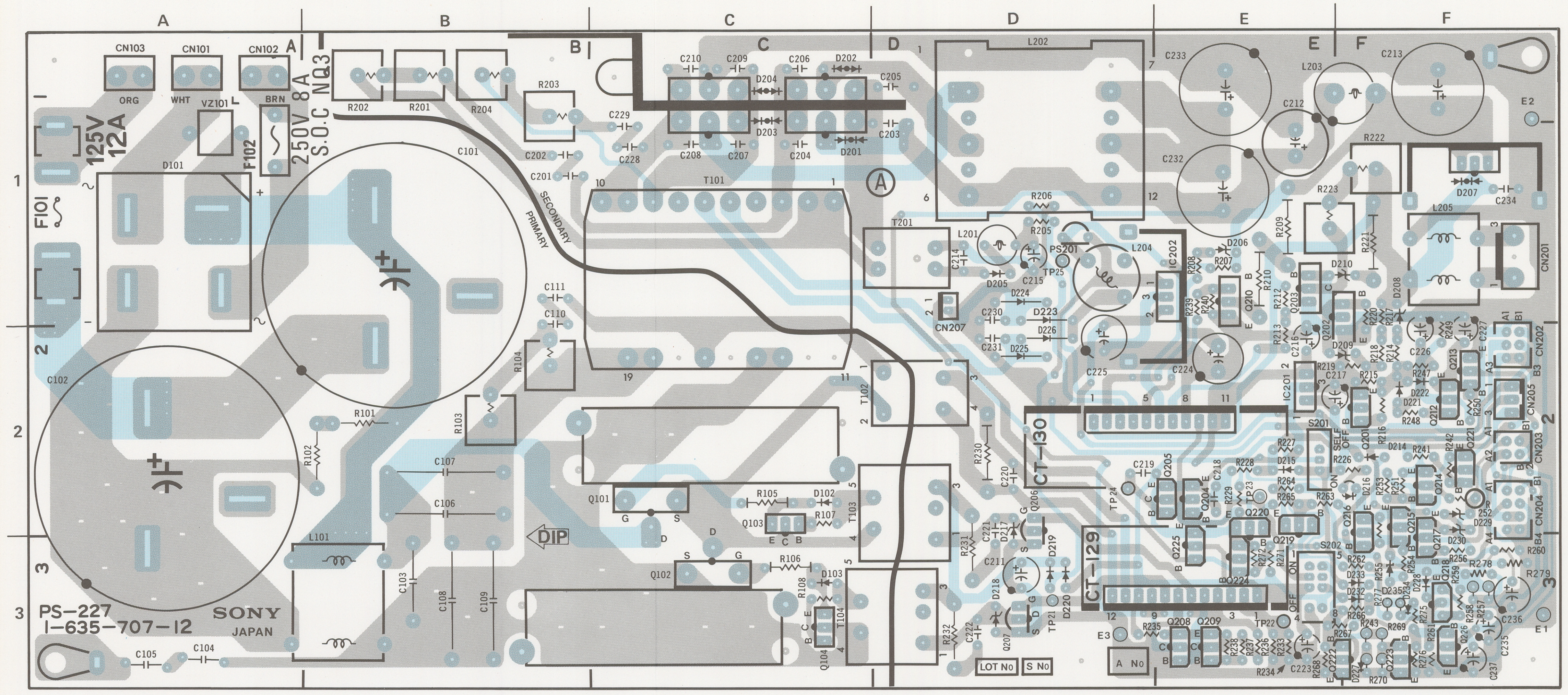
A
B
C
D
E
F
1
2
3
CN103
CN101
CN102
ORG
WHT
BRN
VZ101
F101
F102
125V 12A
250V 8A S.O.C NQ3
D101
C101
C102
SECONDARY
PRIMARY
T101
T102
T103
T104
T201
L101
L201
L202
L203
L204
L205
Q101
Q102
Q103
Q104
DIP
CT-130
CT-129
IC201
IC202
PS201
CN201
CN202
CN203
CN204
CN205
CN207
S201
S202
E1
E2
E3
LOT No
S No
A No
PS-227
1-635-707-12
SONY
JAPAN

1-635-707-12 COMPONENT SIDE

1-635-707-12 SOLDERING SIDE

CT-129 BOARD Ser No.10201-

CT-129 (1-635-709-12)

CN51	A-2
D51	B-2
D52	B-2
D53	B-2
D54	B-2
D55	B-1
D56	B-1
D57	A-1
D58	A-2
D59	A-2
E51	A-1
IC51	B-1
Q53	A-2
TP51	B-1
TP52	A-2
TP53	B-2

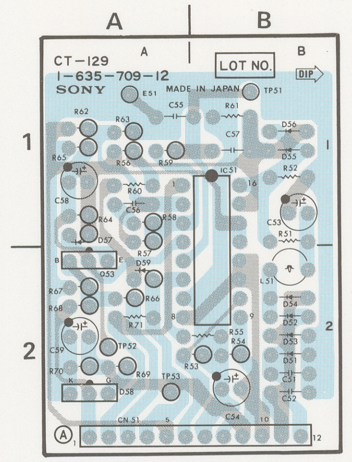
A
B
1
2
CT-129
1-635-709-12
SONY
LOT NO.
MADE IN JAPAN

1-635-709-12 COMPONENT SIDE

1-635-709-12 SOLDERING SIDE

CT-130 BOARD Ser No.10201-

CT-130 (1-635-710-12)

CN301	A-2
D301	A-1
D302	A-2
D303	A-2
D304	A-2
D305	B-2
D306	A-1
D307	A-1
D308	B-1
D309	B-2
E301	B-2
IC301	A-1
IC302	A-2
IC303	A-2
IC304	A-1
IC305	B-1
Q301	B-1
Q302	B-2
Q303	B-2
TP301	B-2
TP302	B-1
TP303	A-1
TP304	A-1

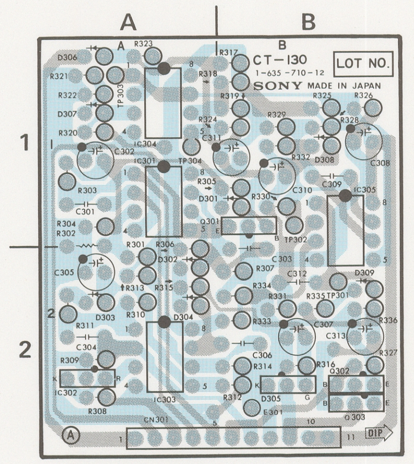
A
B
1
2
CT-130
1-635-710-12
SONY
LOT NO.
MADE IN JAPAN

1-635-710-12 COMPONENT SIDE

1-635-710-12 SOLDERING SIDE

PS-227 BOARD
SWITCHING REGULATOR 1 (HIGH VOLTAGE)

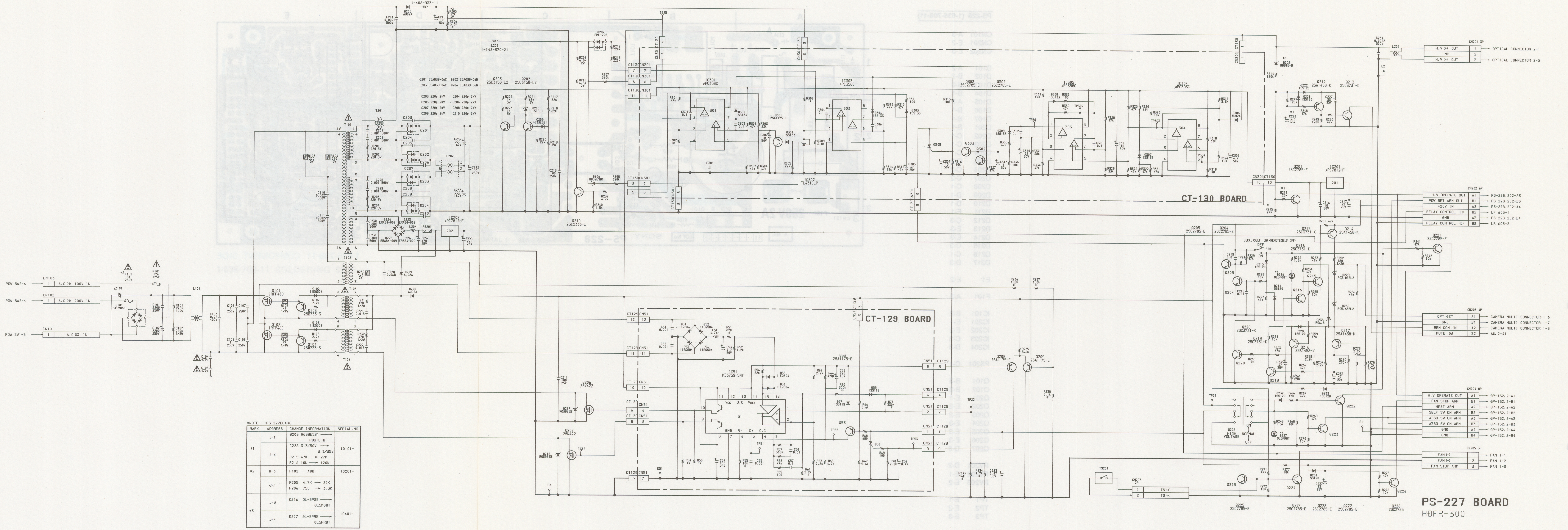
POW SW2-6
CN103
A.C (H) 100V IN
POW SW2-4
CN102
A.C (H) 200V IN
POW SW1-5
CN101
A.C (C) IN
*2 F102 8A 250V
F101 12A 125V
VZ101
D101 S15VB60
C101 2200 250V
C102 2200 250V
R101 220k 1/2W
R102 220k 1/2W
L101
C103 0.22 400V
C104 470p
C105 470p
T101
T102
T103
T104
L201 1-408-933-11
L203 1-142-370-21
IC202 μPC7812HF
IC201 μPC7812HF
CT-130 BOARD
CT-129 BOARD
IC51 MB3759-SNY
L205
CN201 3P
H.V (+) OUT 1 → OPTICAL CONNECTOR 2-1
NC 2
H.V (-) OUT 3 → OPTICAL CONNECTOR 2-5
CN202 6P
H.V OPERATE OUT A1 → PS-228, 202-A3
POW SET ARM OUT B1 → PS-228, 202-B3
+20V IN A2 ← PS-228, 202-A4
RELAY CONTROL (H) B2 → LF, 605-1
GND A3 → PS-228, 202-B4
RELAY CONTROL (C) B3 → LF, 605-2
LOCAL(SELF ON)/REMOTE(SELF OFF)
S201
CN203 4P
OPT DET A1 → CAMERA MULTI CONNECTOR, 1-6
GND B1 → CAMERA MULTI CONNECTOR, 1-7
REM CON IN A2 ← CAMERA MULTI CONNECTOR, 1-8
MUTE (A) B2 → AU, 2-41
S202 HIGH VOLTAGE NORMAL OFF
CN204 8P
H.V OPERATE OUT A1 → DP-152, 2-A1
FAN STOP ARM B1 → DP-152, 2-B1
HEAT ARM A2 → DP-152, 2-A2
SELF SW ON ARM B2 → DP-152, 2-B2
ABSO SW ON ARM A3 → DP-152, 2-A3
ABSO SW ON ARM B3 → DP-152, 2-B3
GND A4 → DP-152, 2-A4
GND B4 → DP-152, 2-B4
CN205 3P
FAN (+) 1 → FAN 1-1
FAN (-) 2 → FAN 1-2
FAN STOP ARM 3 → FAN 1-3
TS201
CN207
TS (+)
TS (-)
1
2
3
4
5

PS-227 BOARD
HDFR-300

*NOTE :PS-227BOARD

MARK	ADDRESS	CHANGE INFORMATION	SERIAL.NO
*1	J-1	D208 RD39ESB1 → RD91E-B	10101-
	J-2	C226 3.3/50V → 3.3/35V R215 47K → 27K R216 10K → 120K	
*2	B-3	F102 ADD	10201-
	D-1	R205 4.7K → 22K R206 750 → 3.3K	
*3	J-3	D216 GL-5PG5 → GL5KG8T	10401-
	J-4	D227 GL-5PR5 → GL5PR8T	

PS-228 BOARD

Ser No.10001-10199

PS-228 (1-635-708-11)

CN101	A-3
CN201	E-2
CN202	E-3
D101	A-2
D102	B-2
D103	B-3
D104	B-1
D105	A-2
D106	B-1
D107	B-1
D201	B-1
D202	C-1
D203	C-1
D204	C-1
D205	C-2
D206	C-2
D207	C-2
D208	C-1
D209	D-1
D210	D-1
D211	E-1
D212	C-3
D213	E-3
D214	E-3
D215	C-3
D216	C-1
D217	D-3
E1	E-2
F101	A-3
IC101	B-2
IC201	E-1
IC202	E-2
IC203	C-3
IC204	D-3
PS201	C-1
Q101	B-3
Q102	B-3
Q201	E-1
Q202	E-2
Q203	E-2
Q204	E-3
Q205	E-3
Q206	E-3
Q207	D-3
RV201	D-2
RV202	E-1
RV203	E-2
TP1	E-1
TP2	E-2
TP3	E-3
T101	B-1
T102	C-3
T103	B-2
T104	B-1

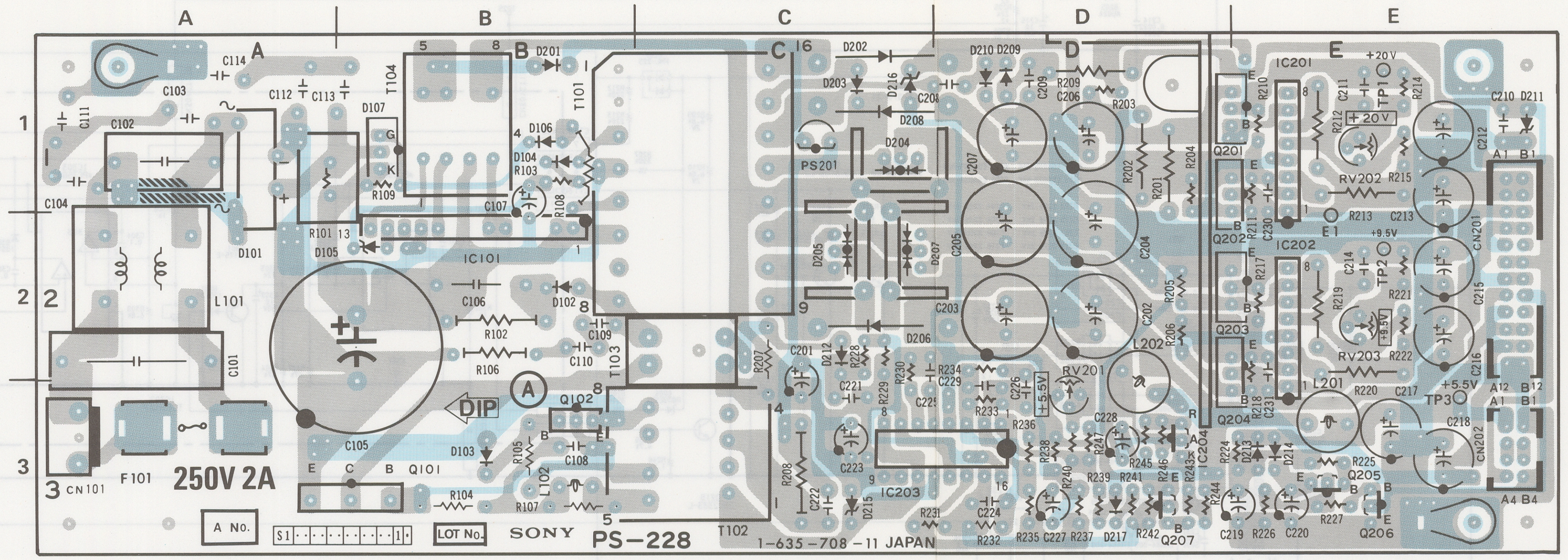
A
B
C
D
E
1
2
3
250V 2A
DIP
A No.
LOT No.
SONY
PS-228
1-635-708-11 JAPAN
CN101
F101
IC101
IC201
IC202
IC203
PS201
RV201
RV202
RV203
TP1
TP2
TP3
+20V
+9.5V
+5.5V

1-635-708-11 COMPONENT SIDE

1-635-708-11 SOLDERING SIDE

PS-228 BOARD

Ser No.10201-

PS-228 (1-635-708-12)

CN101	A-3
CN201	E-2
CN202	E-3
D101	A-2
D102	B-2
D103	B-3
D104	B-1
D105	A-2
D106	B-1
D107	B-1
D201	B-1
D202	C-1
D203	C-1
D204	C-1
D205	C-2
D206	C-2
D207	C-2
D208	C-1
D209	D-1
D210	D-1
D211	E-1
D212	C-2
D213	E-3
D214	E-3
D215	C-3
D216	C-1
D217	D-3
E1	E-2
F101	A-3
IC101	B-2
IC201	E-1
IC202	E-2
IC203	C-3
IC204	D-3
PS201	C-1
Q101	B-3
Q102	B-3
Q201	E-1
Q202	E-2
Q203	E-2
Q204	E-3
Q205	E-3
Q206	E-3
Q207	D-3
RV201	D-2
RV202	E-1
RV203	E-2
TP1	E-1
TP2	E-2
TP3	E-3
T101	B-1
T102	C-3
T103	B-2
T104	B-1

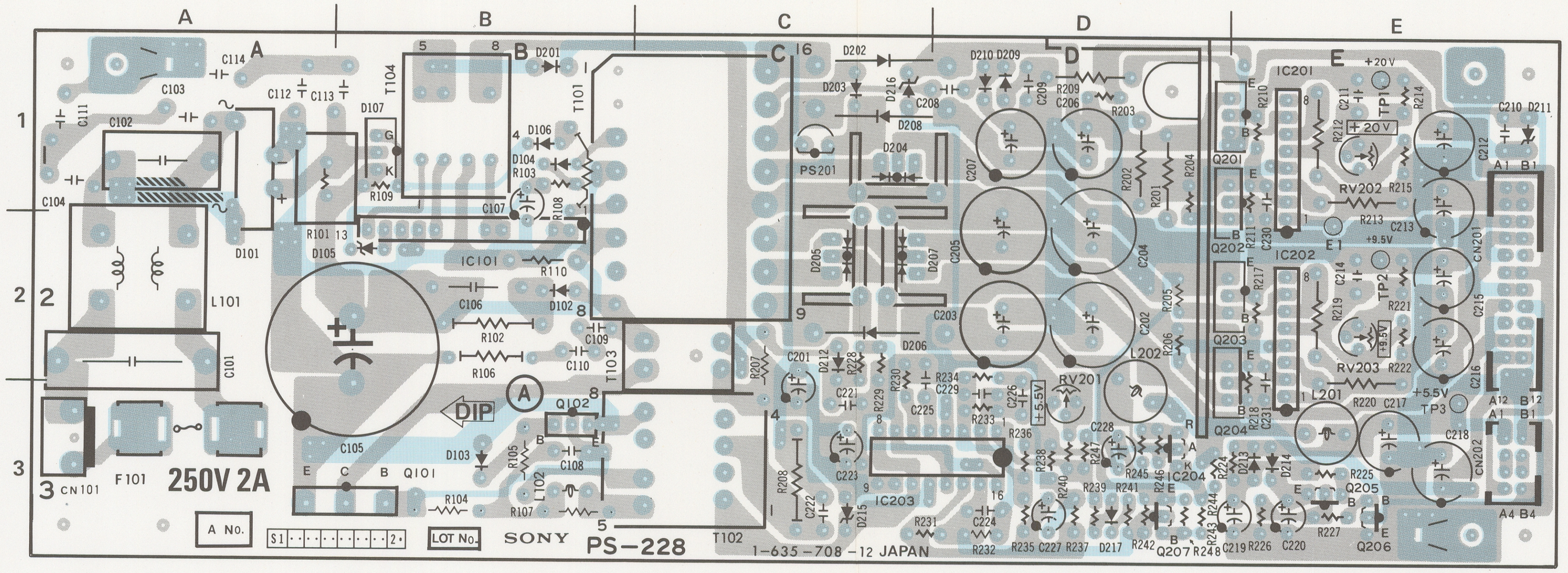
A
B
C
D
E
1
2
3
CN101
F101
250V 2A
L101
C101
C102
C103
C104
C105
C106
C107
C108
C109
C110
C111
C112
C113
C114
D101
D102
D103
D104
D105
D106
D107
D201
D202
D203
D204
D205
D206
D207
D208
D209
D210
D211
D212
D215
D216
D217
T101
T102
T103
T104
IC101
IC201
IC202
IC203
IC204
PS201
Q101
Q102
Q201
Q202
Q203
Q204
Q205
Q206
Q207
RV201
RV202
RV203
L102
L201
L202
TP1
TP2
TP3
E1
CN201
CN202
+20V
+9.5V
+5.5V
DIP
A No.
LOT No.
SONY
PS-228
1-635-708-12 JAPAN

1-635-708-12 COMPONENT SIDE

1-635-708-12 SOLDERING SIDE

PS-228 BOARD

SWITCHING REGULATOR 2

NOTE;

MARK	ADDRESS	CHANGE INFORMATION	SERIAL.NO
*1	C-4	Q101 2SC3460-L → 2SC3460-M	10301-

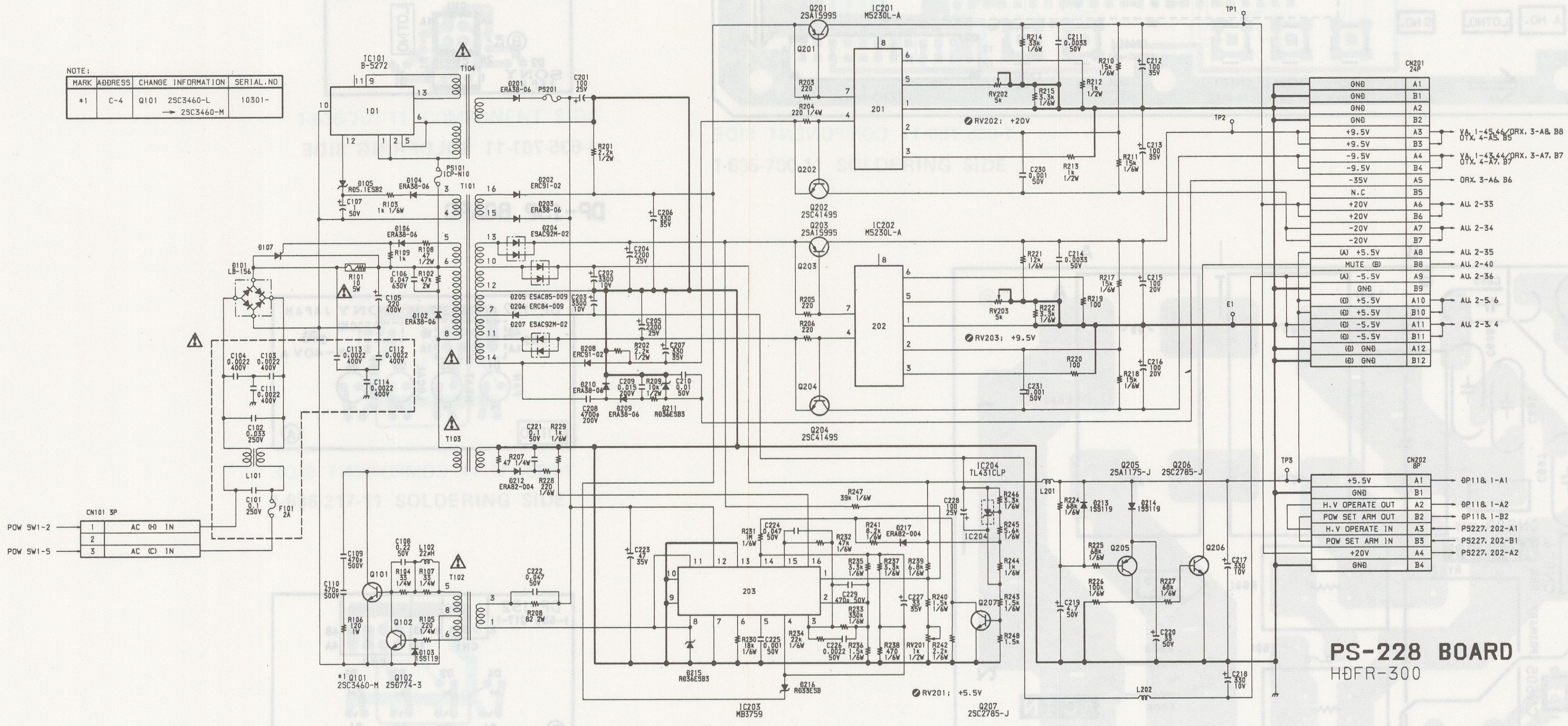
PS-228 BOARD
HDFR-300
CN101 3P
POW SW1-2
POW SW1-5
AC (H) IN
AC (C) IN
IC101 B-5272
T101
T102
T103
T104
PS101
F101 2A
L101
Q101 2SC3460-M
Q102 2SC774-3
Q201 2SA1599S
Q202 2SC4149S
Q203 2SA1599S
Q204 2SC4149S
Q205 2SA1175-J
Q206 2SC2785-J
Q207 2SC2785-J
IC201 M5230L-A
IC202 M5230L-A
IC203 MB3759
IC204 TL431CLP
RV201: +5.5V
RV202: +20V
RV203: +9.5V
TP1
TP2
TP3
CN201 24P
GND A1
GND B1
GND A2
GND B2
+9.5V A3
+9.5V B3
-9.5V A4
-9.5V B4
-35V A5
N.C B5
+20V A6
+20V B6
-20V A7
-20V B7
(A) +5.5V A8
MUTE (B) B8
(A) -5.5V A9
GND B9
(D) +5.5V A10
(D) +5.5V B10
(D) -5.5V A11
(D) -5.5V B11
(D) GND A12
(D) GND B12
VA. 1-45.46/ORX. 3-A8. B8
OTX. 4-A5. B5
VA. 1-43.44/ORX. 3-A7. B7
OTX. 4-A7. B7
ORX. 3-A6. B6
AU. 2-33
AU. 2-34
AU. 2-35
AU. 2-40
AU. 2-36
AU. 2-5. 6
AU. 2-3. 4
CN202 8P
+5.5V A1
GND B1
H.V OPERATE OUT A2
POW SET ARM OUT B2
H.V OPERATE IN A3
POW SET ARM IN B3
+20V A4
GND B4
DP118. 1-A1
DP118. 1-A2
DP118. 1-B2
PS227. 202-A1
PS227. 202-B1
PS227. 202-A2

MB-294 BOARD

Ser No.10001-10199

MB-294 (1-635-700-11)

CN1	D-2
CN2	D-1
CN3	C-2
CN4	E-2
CN5	F-3
CN6	B-1
CN7	F-1
CN101	C-3
CN201	B-3
CN301	B-3
CN401	D-3
CN501	D-3

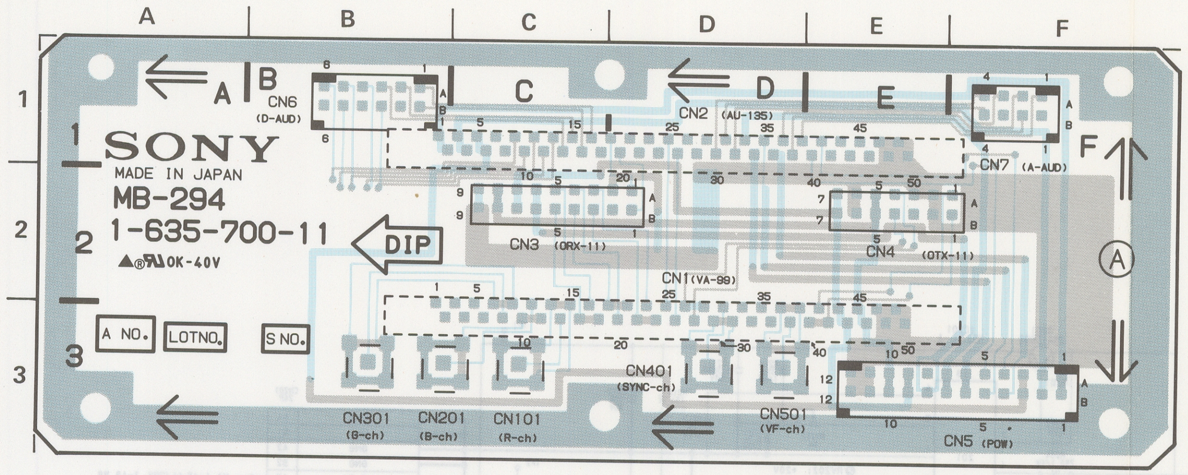
A
B
C
D
E
F
1
2
3
SONY
MADE IN JAPAN
MB-294
1-635-700-11
OK-40V
DIP
A NO.
LOTNO.
S NO.
CN6 (D-AUD)
CN2 (AU-135)
CN7 (A-AUD)
CN3 (ORX-11)
CN4 (OTX-11)
CN1 (VA-99)
CN401 (SYNC-ch)
CN301 (B-ch)
CN201 (G-ch)
CN101 (R-ch)
CN501 (VF-ch)
CN5 (POW)
Ⓐ

1-635-700-11 COMPONENT SIDE

DP-118 BOARD

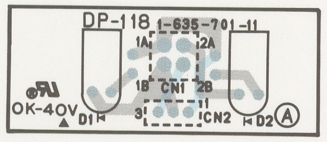
DP-118 1-635-701-11
OK-40V
1A
2A
1B
2B
CN1
CN2
D1
D2
Ⓐ

1-635-701-11 COMPONENT SIDE

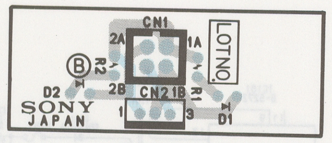
CN1
2A
1A
2B
1B
CN2
LOTNO
Ⓑ
D2
D1
SONY JAPAN

1-635-701-11 SOLDERING SIDE

DP-152 BOARD

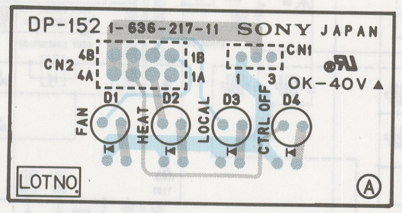
DP-152 1-636-217-11 SONY JAPAN
CN2
4B
4A
1B
1A
CN1
OK-40V
D1
D2
D3
D6
FAN
HEAT
LOCAL
CTRL OFF
LOTNO
Ⓐ

1-636-217-11 COMPONENT SIDE

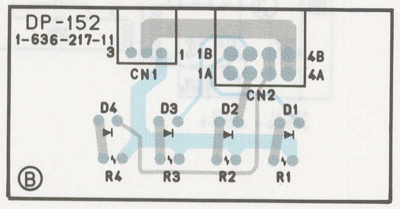
DP-152 1-636-217-11
CN1
1B
1A
4B
4A
CN2
D4
D3
D2
D1
R4
R3
R2
R1
Ⓑ

1-636-217-11 SOLDERING SIDE

LF-22 BOARD

LF-22 (1-635-704-12)

CN601	A-2
CN602	A-2
CN603	B-1
CN604	B-2
CN605	B-2
F601	B-2
D601	B-2
RY601	B-2

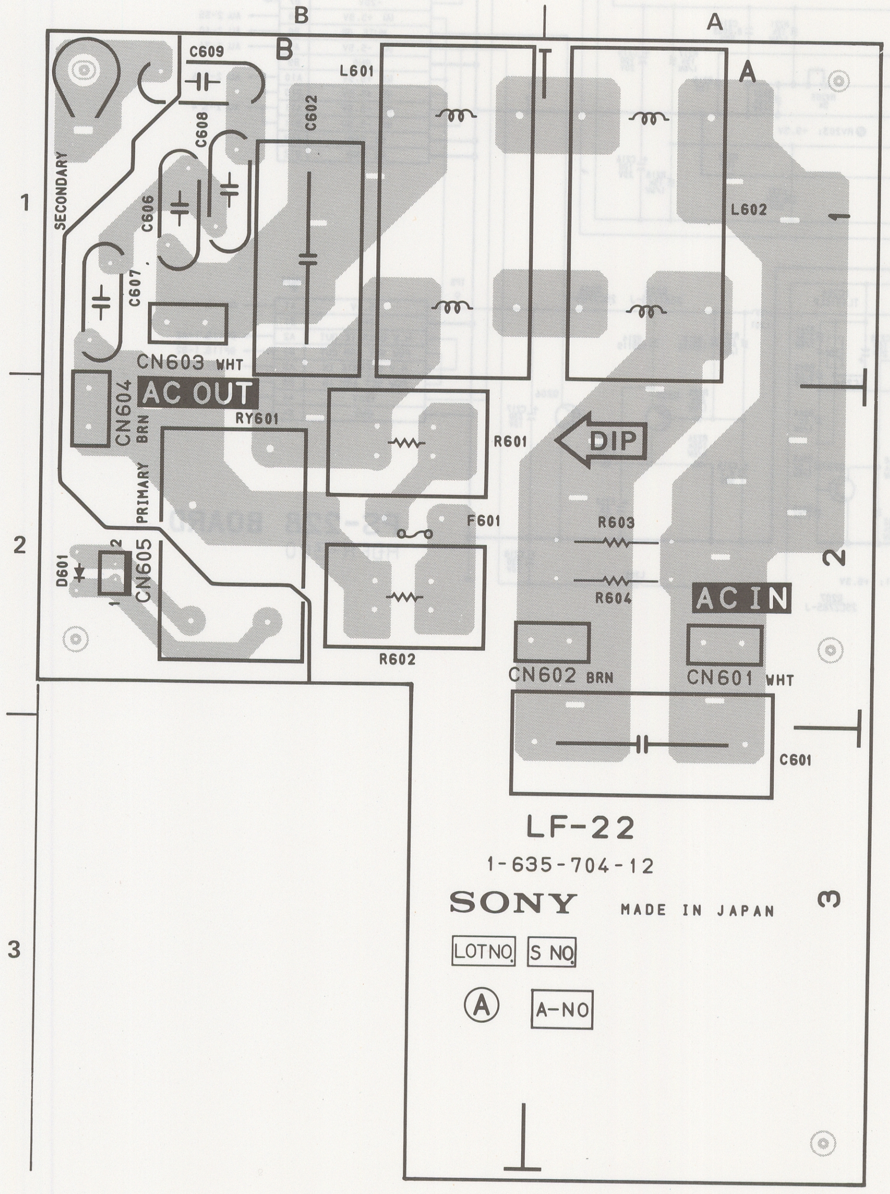
B
A
1
2
3
C609
C608
C602
L601
L602
C606
C607
SECONDARY
CN603 WHT
AC OUT
CN604 BRN
RY601
PRIMARY
R601
DIP
F601
R603
R604
D601
CN605
R602
AC IN
CN602 BRN
CN601 WHT
C601
LF-22
1-635-704-12
SONY
MADE IN JAPAN
LOTNO
S NO
Ⓐ
A-NO

1-635-704-12 SOLDERING SIDE

MB-294 BOARD

Ser No.10201-

MB-294 (1-635-700-12)

CN1	D-2
CN2	D-1
CN3	C-2
CN4	E-2
CN5	F-3
CN6	B-1
CN7	F-1
CN101	C-3
CN201	B-3
CN301	B-3
CN401	D-3
CN501	D-3

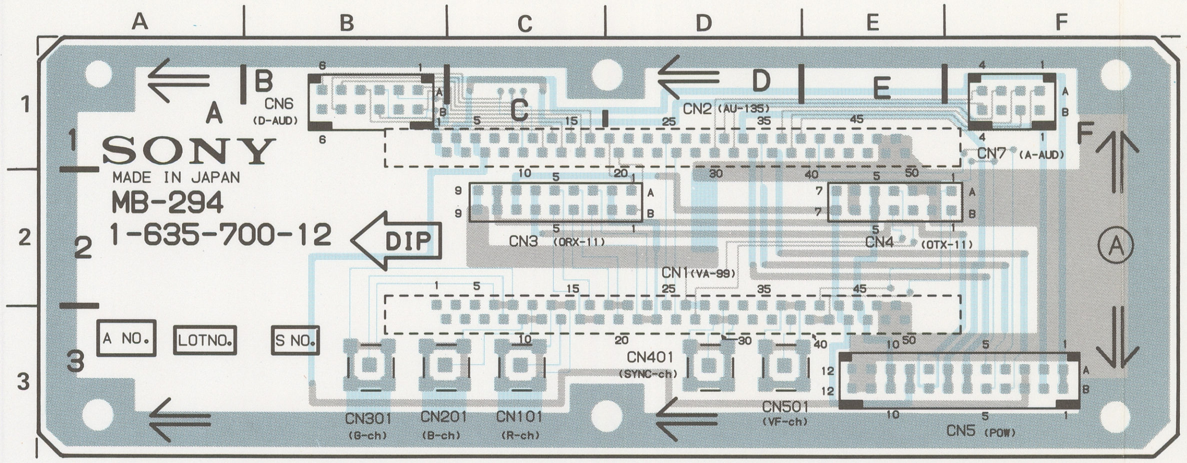
A
B
C
D
E
F
1
2
3
SONY
MADE IN JAPAN
MB-294
1-635-700-12
DIP
CN6 (D-AUD)
CN2 (AU-135)
CN7 (A-AUD)
CN3 (DRX-11)
CN4 (DTX-11)
CN1 (VA-99)
CN401 (SYNC-ch)
CN501 (VF-ch)
CN5 (POW)
CN301 (G-ch)
CN201 (B-ch)
CN101 (R-ch)
A NO.
LOTNO.
S NO.

1-635-700-12 COMPONENT SIDE

1-635-700-12 SOLDERING SIDE

DP-118 BOARD

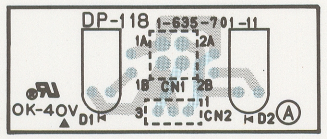
DP-118 1-635-701-11
1A
2A
1B
CN1
2B
OK-40V
D1
CN2
D2
A

1-635-701-11 COMPONENT SIDE

1-635-701-11 SOLDERING SIDE

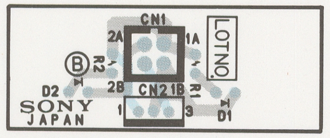
CN1
2A
1A
B
LOTNO
2B
CN2 1B
D2
SONY JAPAN
D1

1-635-701-11 COMPONENT SIDE

1-635-701-11 SOLDERING SIDE

LF-22 BOARD

LF-22 (1-635-704-12)

CN601	A-2
CN602	A-2
CN603	B-1
CN604	B-2
CN605	B-2
F601	B-2
D601	B-2
RY601	B-2

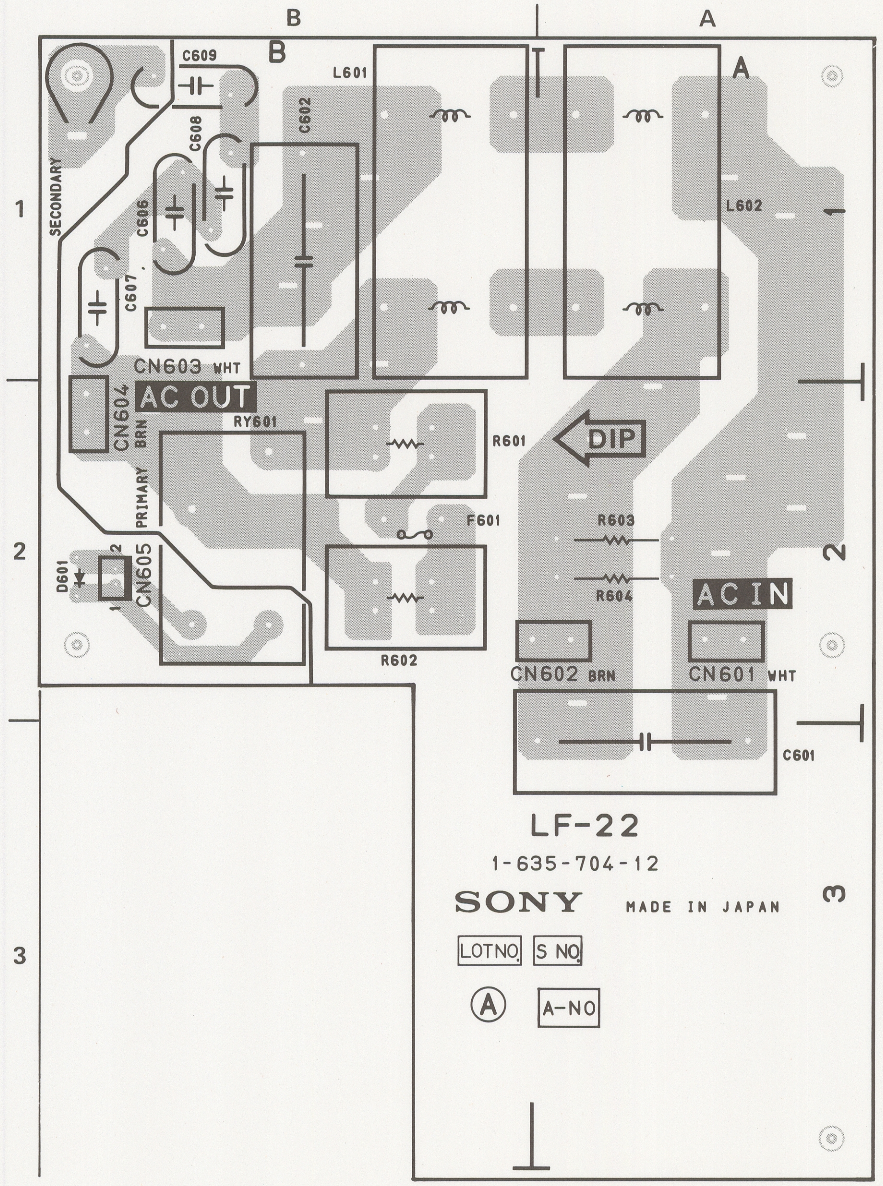
B
A
1
2
3
C609
L601
L602
C602
C608
C606
C607
SECONDARY
PRIMARY
CN603 WHT
AC OUT
CN604 BRN
RY601
R601
DIP
F601
R603
R604
AC IN
D601
CN605
R602
CN602 BRN
CN601 WHT
C601
LF-22
1-635-704-12
SONY
MADE IN JAPAN
LOTNO
S NO
A
A-NO

1-635-704-12 SOLDERING SIDE

DP-152 BOARD

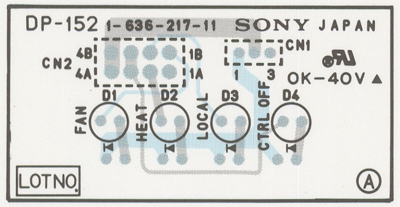
DP-152 1-636-217-11 SONY JAPAN
CN2
4B
4A
1B
1A
CN1
3
OK-40V
D1
D2
D3
D4
FAN
HEAT
LOCAL
CTRL OFF
LOTNO
A

1-636-217-11 COMPONENT SIDE

1-636-217-11 SOLDERING SIDE

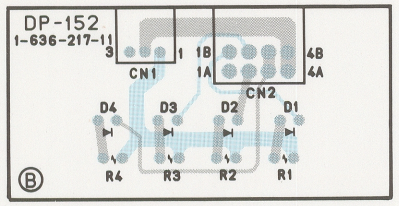
DP-152
1-636-217-11
3
1
1B
1A
4B
4A
CN1
CN2
D4
D3
D2
D1
R4
R3
R2
R1
B

1-636-217-11 COMPONENT SIDE

1-636-217-11 SOLDERING SIDE

FRAME
MB-294 BOARD
LF-22 BOARD
DP-118 BOARD
DP-152 BOARD

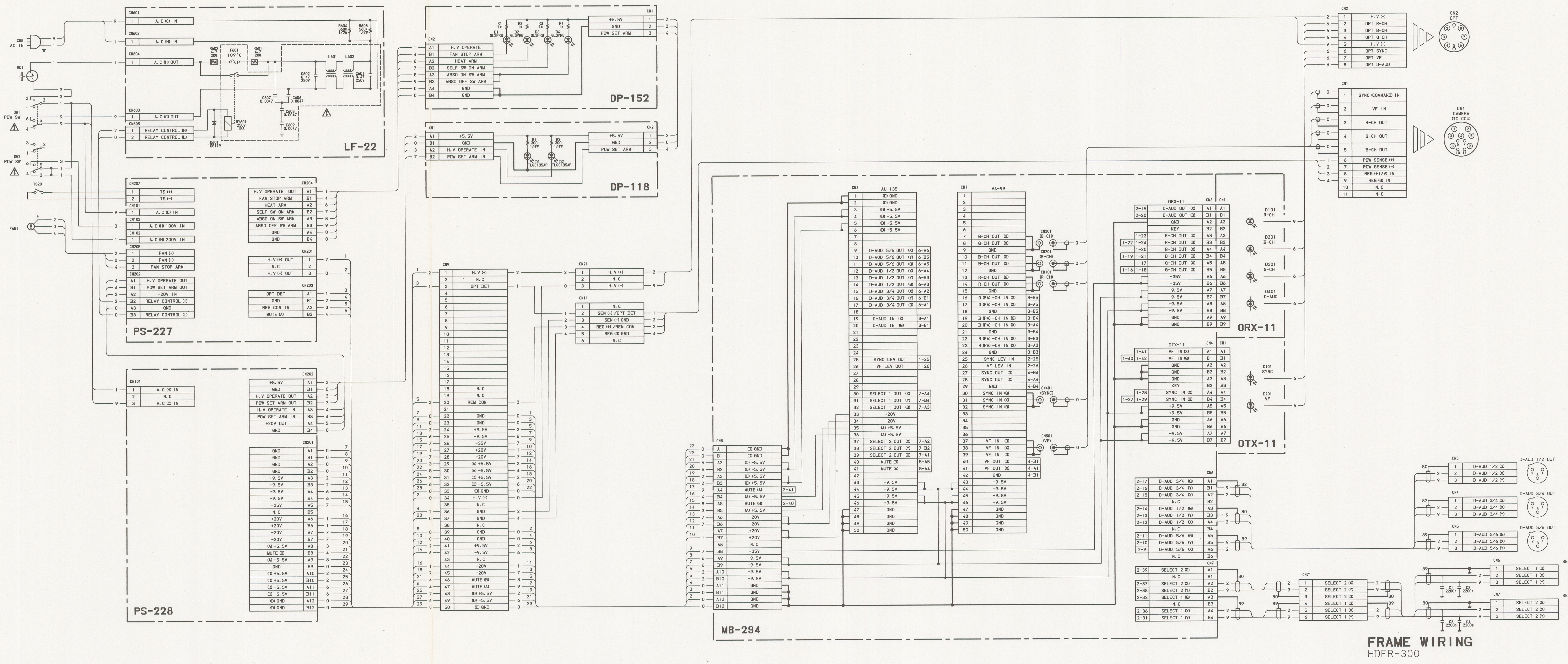
CN6 AC IN
BK1
SW1 POW SW
SW2 POW SW
TS201
FAN1
CN601 A.C (C) IN
CN602 A.C (H) IN
CN604 A.C (H) OUT
CN603 A.C (C) OUT
CN605 RELAY CONTROL (H) RELAY CONTROL (L)
F601 109°C
RY601
D601 1SS119
L601 L602
LF-22
DP-152
DP-118
CN1 +5.5V GND POW SET ARM
CN2 H.V OPERATE FAN STOP ARM HEAT ARM SELF SW ON ARM ABSO ON SW ARM ABSO OFF SW ARM GND
PS-227
PS-228
CN9
CN21 H.V (+) N.C H.V (-)
CN11 N.C SEN (+) /OPT DET SEN (-) GND REB (+) /REM COM REB (B) GND N.C
CN5
MB-294
AU-135
VA-99
CN301 (B-CH)
CN201 (G-CH)
CN101 (R-CH)
CN401 (SYNC)
CN501 (VF)
ORX-11
OTX-11
D101 R-CH
D201 G-CH
D301 B-CH
D401 D-AUD
D101 SYNC
D201 VF
CN2 OPT
CN1 CAMERA (TO CCU)
SYNC (COMMAND) IN
VF IN
R-CH OUT
G-CH OUT
B-CH OUT
POW SENSE (+)
POW SENSE (-)
REG (+17V) IN
REG (B) IN
N.C
CN3 D-AUD 1/2 OUT
CN4 D-AUD 3/4 OUT
CN5 D-AUD 5/6 OUT
CN6 SELECT 1 OUT
CN7 SELECT 2 OUT
CN71
CN6 CN7

FRAME WIRING
HDFR-300

SECTION D
SPARE PARTS

PARTS INFORMATION

1. **Safety Related Component Warning**

   Components indentified by shading marked with ⚠ on the schematic diagrams, exploded views and electrical spare parts list are critical to safe operation. Replace these components with Sony parts whose parts numbers appear as shown in this manual or in service manual supplements published by Sony.

2. Replace Parts that are supplied from Sony Parts Center can sometimes have different shape and external appearance than what are actually used in equipment. This is due to **"accommodating the improved parts and/or engineering changes" or "standardization of genuine parts."**

   - This manual 's exploded view and electrical spare parts lists are indicating the parts numbers of "the standardized genuine parts at present."

   - Regarding engineering parts and diagrams changes in our engineering department, refer to Sony service bulletins and service manual supplements.

3. The parts marked with "S" in the SP column of the exploded views and electrical spare parts list are normally required for routine service work. Orders for parts marked with "O" will be processed, but allow for additional delivery time.

4. Item with no parts number and/or no description are not stocked because they are seldom required for routine service.

5. Regarding engineering parts changes in our engineering department, refer to SECTION E "CHANGED PARTS".

6. Abbreviation

REF.NO.	DESCRIPTION	REF.NO.	DESCRIPTION	REF.NO.	DESCRIPTION
BT	BATTERY	F	FUSE	RB, RP	RESISTOR BLOCK
BZ	BUZZER	FB	FERRITE BEAD	RY	RELAY
C	CAPACITOR	FL	FILTER	RV	VARIABLE RESISTOR
CF	CERAMIC FILTER	IC	IC	S	SWITCH
CN	CONNECTOR	L	INDUCTOR	T	TRANSFORMER
CP	COMBINATION PARTS	LV	VARIABLE INDUCTOR	TH	THERMISTOR
CV	VARIABLE CAPACITOR	PL	PILOT LAMP	TM	TIMER
D	DIODE	Q	TRANSISTOR	VDR	VARISTOR
DL	DELAY LINE	R	RESISTOR	X	OSCILLATOR

All capacitors are in micro farads unless otherwise specified.
All inductors are in micro henries unless otherwise specified.
All resistors are in ohms.

EXPLODED VIEW

PC BOARD

No.	Part No.	SP	Description
1	A-7515-183-A	o	MOUNTED CIRCUIT BOARD, AU-135
2	A-7515-184-A	o	MOUNTED CIRCUIT BOARD, VA-99
3	A-7515-185-A	o	MOUNTED CIRCUIT BOARD, MB-294
4	A-7515-186-A	o	MOUNTED CIRCUIT BOARD, OTX-11
5	A-7515-187-A	o	MOUNTED CIRCUIT BOARD, ORX-11
6	A-7570-046-A	s	TABLE ASSY, LOCK
7	A-7615-184-A	s	PD ASSY
8	A-7615-263-A	s	LED ASSY
9	3-500-131-00	s	SPRING, COMPRESSION
10	3-673-676-21	o	RAIL, PC BOARD GUIDE

PC BOARD

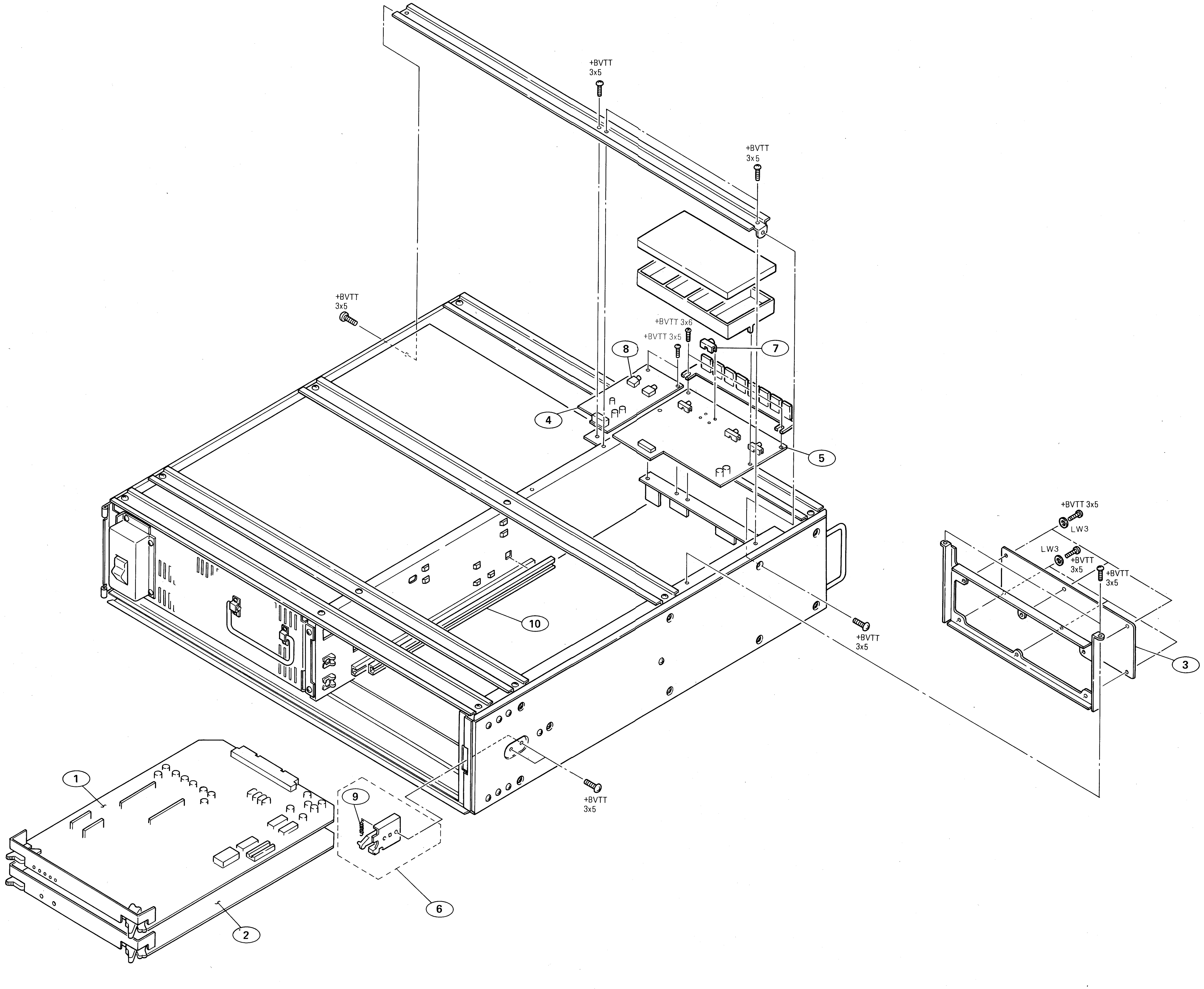
+BVTT
3x5
+BVTT
3x5
+BVTT
3x5
+BVTT 3x6
+BVTT 3x5
8
7
4
5
10
+BVTT 3x5
LW3
LW3
+BVTT
3x5
+BVTT
3x5
+BVTT
3x5
3
+BVTT
3x5
1
9
6
2

POWER UNIT

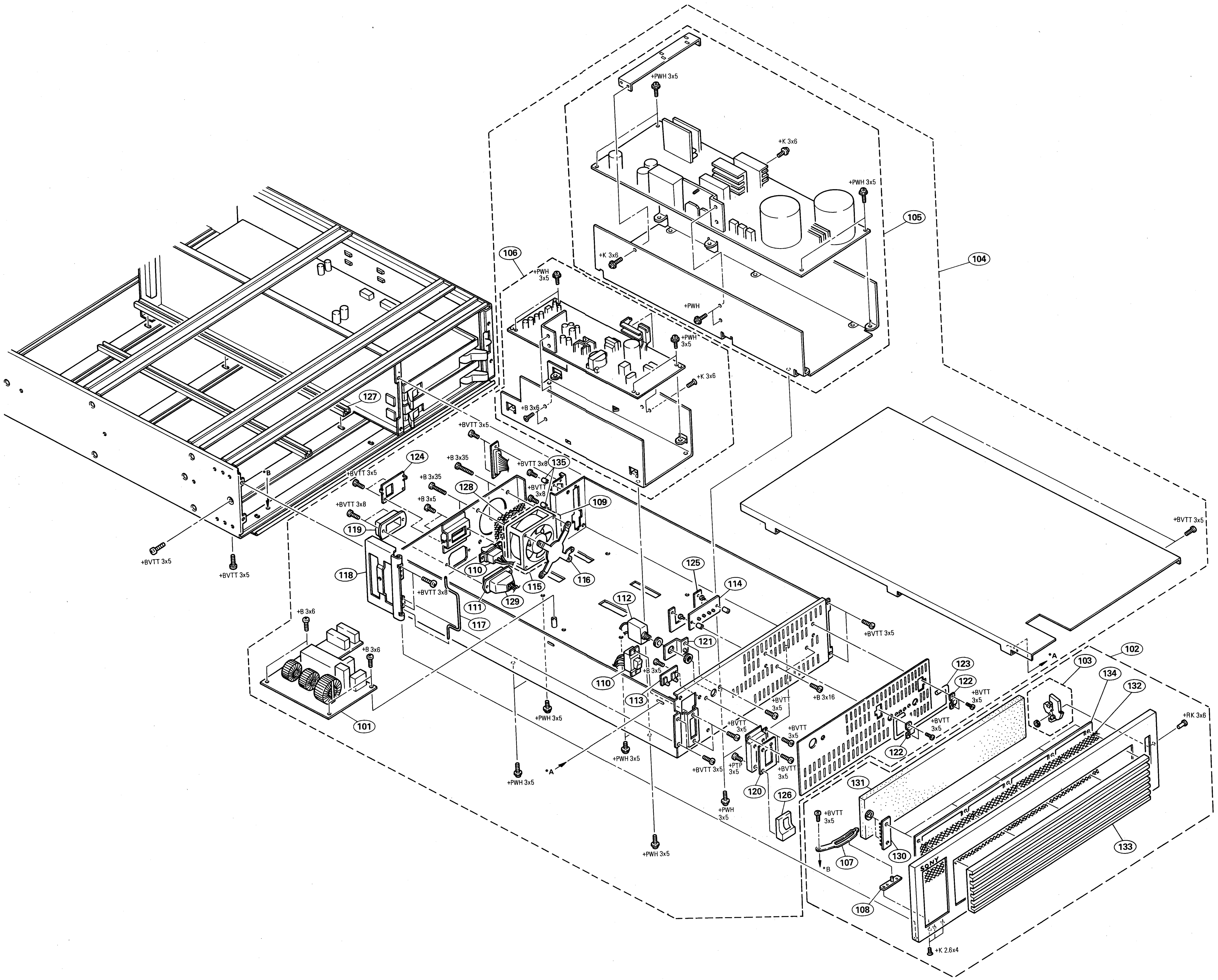
+PWH 3x5
+K 3x6
+PWH 3x5
105
104
106
+PWH 3x5
+K 3x6
+PWH
+PWH 3x5
+K 3x6
+B 3x6
127
+BVTT 3x5
124
+BVTT 3x5
+B 3x35
+B 3x35
+BVTT 3x8
135
+BVTT 3x8
+B 3x5
128
109
+BVTT 3x8
119
118
110
115
116
+BVTT 3x8
111
129
117
+BVTT 3x5
+BVTT 3x5
125
114
112
121
+BVTT 3x5
+B 3x6
+B 3x6
101
110
113
+B 3x5
+B 3x16
+BVTT 3x5
+BVTT 3x5
+BVTT 3x5
+BVTT 3x5
+BVTT 3x5
+PTP 3x5
+BVTT 3x5
+BVTT 3x5
+PWH 3x5
+PWH 3x5
+PWH 3x5
+PWH 3x5
*A
120
126
+PWH 3x5
+PWH 3x5
123
122
122
+BVTT 3x5
*A
102
103
134
132
+RK 3x6
131
+BVTT 3x5
*B
107
130
133
108
+K 2.6x4
SONY

POWER UNIT

No.	Part No.	SP	Description
101	A-7515-182-A	o	MOUNTED CIRCUIT BOARD, LF-22
102	A-7570-047-A	o	FRONT ASSY
103	A-7570-048-A	s	HANDLE ASSY, SWITCHING
104	A-7570-049-A	o	POWER UNIT
105	A-7584-071-A	o	POWER ASSY, A
106	A-7584-072-A	o	POWER ASSY, B
107	3-174-488-01	s	STAY
108	X-3166-510-1	s	BRACKET ASSY, STAY
109	1-541-611-21	s	FAN, DC
110	1-552-060-21	s	SWITCH, SEESAW "AC POWER"
111	1-580-375-11	s	INLET 3P
112	1-576-037-11	s	BREAKER, CIRCUIT
113	1-635-701-11	s	PRINTED CIRCUIT BOARD, DP-118
114	1-636-217-11	o	PRINTED CIRCUIT BOARD, DP-152
115	1-946-222-11	o	HARNESS (FAN)
116	2-112-820-01	o	BRACKET, HEAT SINK
117	2-146-518-01	s	WIRE (2U), HINGE
118	2-146-530-21	s	HINGE (2U), FRONT
119	2-990-241-01	o	HOLDER (A), PLUG
120	3-166-836-01	o	PLATE, ORNAMENTAL, PSW
121	3-166-837-01	o	PLATE, BREAKER
122	3-166-838-01	o	RETAINER
123	3-166-839-01	o	HANDLE, DRAWER
124	3-166-841-01	o	PANEL, VOLTAGE SELECTOR
125	3-625-620-01	s	BRACKET, AC CONNECTOR
126	3-651-850-03	s	GUARD, P SWITCH
127	3-673-676-41	o	RAIL, GUIDE, PC BOARD
128	3-675-898-03	o	PLATE, VENTILATION
129	4-601-466-11	s	COVER, 3P INLET
130	4-937-120-01	o	STOPPER, FILTER
131	4-937-143-01	s	FILTER (2U)
132	4-937-144-01	o	NET (2U), FRONT
133	4-937-156-11	o	GRILLE (2U), FRONT
134	4-937-157-01	o	RETAINER (2U), GRILLE
135	3-654-058-11	o	SPACER (3X2)

REAR PANEL

No.	Part No.	SP	Description
201	A-7602-076-A	s	CONNECTOR, 8P FEMALE "OPT"
202	X-3316-715-1	s	FOOT ASSY
203	1-509-176-41	s	CONNECTOR, 3P MALE "DIGITAL AUDIO OUT"
204	1-509-176-51	s	CONNECTOR, 3P MALE "ANALOG AUDIO OUT"
205	1-563-223-11	s	CAP, DUST
206	1-946-217-11	o	HARNESS "CCU"
207	2-146-588-01	o	PANEL, REAR
208	4-879-919-00	o	ANGLE, GUARD

REAR PANEL

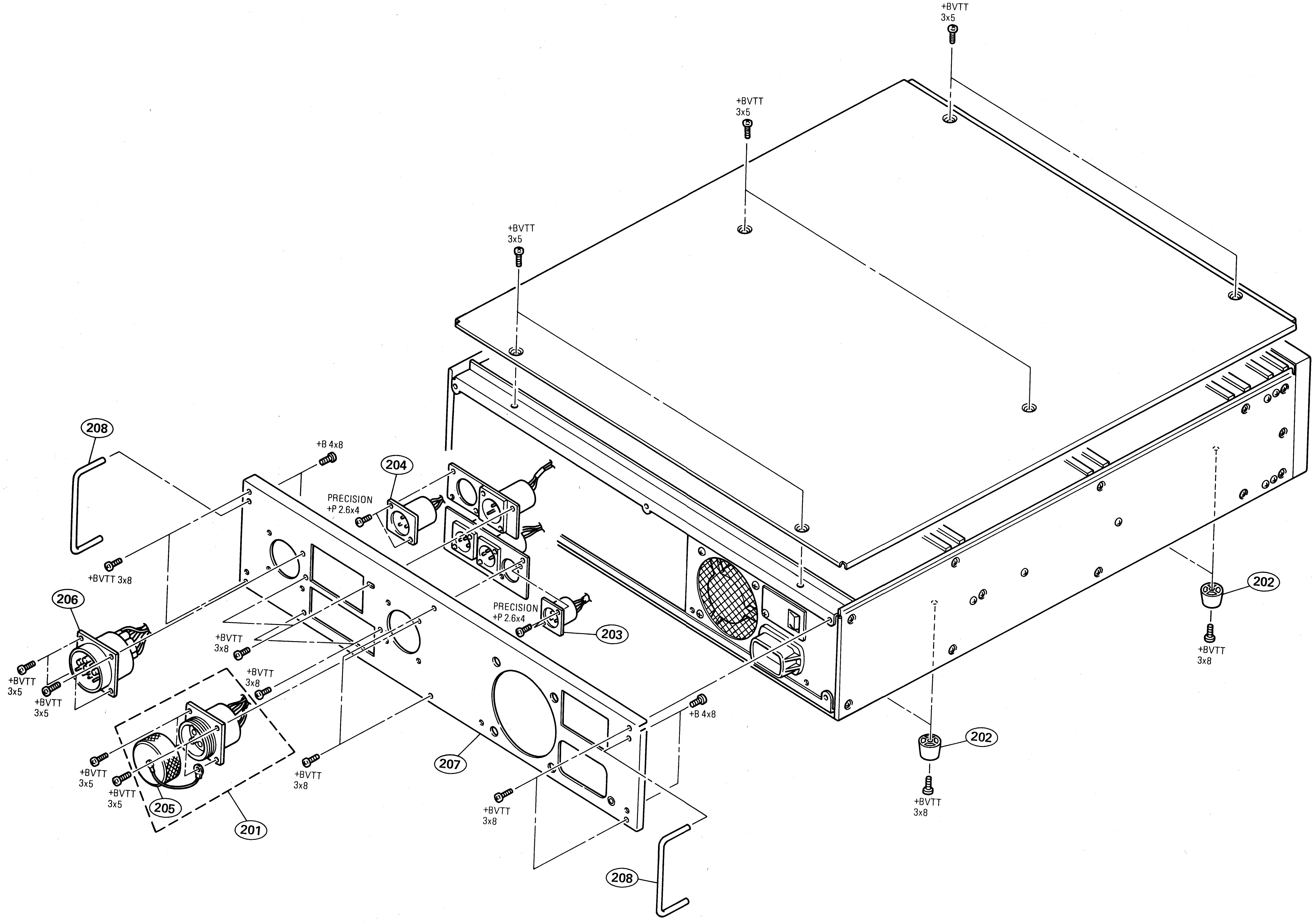
+BVTT
3x5
+BVTT
3x5
+BVTT
3x5
208
+B 4x8
204
PRECISION
+P 2.6x4
+BVTT 3x8
206
+BVTT
3x8
+BVTT
3x5
+BVTT
3x5
+BVTT
3x8
PRECISION
+P 2.6x4
203
202
+BVTT
3x8
+B 4x8
207
+BVTT
3x5
+BVTT
3x5
205
201
+BVTT
3x8
+BVTT
3x8
202
+BVTT
3x8
208

SCREWS

PRECISION +P
Cr-N

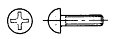

7-627-□□□-□□

Size	Parts No.
1.7 × 1.6	–
× 1.8	–
× 2	552-27
× 2.2	552-87
× 2.5	552-07
× 2.8	–
× 3	552-37
× 3.5	–
× 4	552-47
× 4.5	552-67
× 5	552-57
× 5.5	557-07
× 6	552-77
× 8	552-97
2 × 1.8	554-37
× 2	553-17
× 2.2	554-07
× 2.5	553-27
× 2.8	–
× 3	553-37
× 3.5	554-17
× 4	553-47
× 4.5	553-57
× 5	553-67
× 5.5	–
× 6	554-27
× 7	553-87
× 8	553-97
× 10	553-77
2.6 × 2.8	556-07
× 3	–
× 3.5	–
× 4	556-37
× 4.5	–
× 5	556-57
× 5.5	–
× 6	556-77
× 7	–
× 8	556-97
× 9	–
× 10	557-47

+B
Cr-N

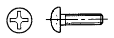

7-682-□□□-□□

Size	Parts No.
3 × 3	544-04
× 4	545-04
× 5	546-04
× 6	547-04
× 8	548-04
× 10	549-04
× 12	550-04
× 14	551-04
× 16	552-04
× 20	553-04
4 × 4	558-04
× 5	559-04
× 6	560-04
× 8	561-04
× 10	562-04
× 12	563-04
× 14	564-04
× 16	565-04
× 20	566-04
× 25	567-04
× 30	568-04
× 35	569-04
× 40	570-04
× 45	571-04
× 50	572-04
5 × 8	574-04
× 10	575-04
× 12	576-04
× 14	577-04
× 16	578-04
× 20	579-04
× 25	580-04
× 30	581-04

+B
Bzn-N

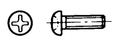

7-682-□□□-□□

SIZE	Parts No.
3 x 3	544-09
x 4	545-09
x 5	546-09
x 6	547-09
x 8	548-09
x 10	549-09
x 12	550-09
x 14	551-09
x 16	552-09
x 20	553-09
x 30	555-09
4 x 4	558-09
x 5	559-09
x 6	560-09
x 8	561-09
x 10	562-09
x 12	563-09
x 14	564-09
x 16	565-09
x 20	566-09
5 x 8	574-09
x 10	575-09
x 12	576-09
x 14	577-09
x 16	578-09
x 20	579-09

+BVTT
BZn-N

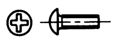

7-685-□□□-□□

SIZE	Parts No.
2 x 3	850-09
x 4	851-09
x 5	852-09
x 6	853-09
x 8	854-09
x 10	855-09
x 12	856-09
2.6 x 4	860-09
x 5	861-09
x 6	862-09
x 8	863-09
x 10	864-09
x 12	865-09
x 14	866-09
x 16	867-09
x 20	868-09
3 x 5	870-09
x 6	871-09
x 8	872-09
x 10	873-09
x 12	874-09
x 14	875-09
x 16	876-09
x 20	877-09
x 25	878-09
x 30	879-09

+BVTT
Cr-N

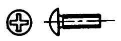

7-685-□□□-□□

SIZE	Parts No.
2 x 3	850-04
x 4	851-04
x 5	852-04
x 6	853-04
x 8	854-04
x 10	855-04
x 12	856-04
2.6 x 4	860-04
x 5	861-04
x 6	862-04
x 8	863-04
x 10	864-04
x 12	865-04
x 14	866-04
x 16	867-04
x 20	868-04
3 x 5	870-04
x 6	871-04
x 8	872-04
x 10	873-04
x 12	874-04
x 14	875-04
x 16	876-04
x 20	877-04
x 25	878-04
x 30	879-04

+P
Ni-N

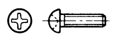

7-621-□□□-□□

SIZE	Parts No.
2 x 3	255-12
x 4	255-22
x 5	255-32
x 6	255-42
x 8	255-52
x 10	255-62
x 12	255-72
x 14	–
x 16	–
x 20	–
2.3 x 5	–
x 6	–
x 8	–
x 10	–
x 12	–
x 14	–
x 16	–
x 20	–
2.6 x 3	259-12
x 4	259-22
x 5	259-32
x 6	259-42
x 8	259-52
x 10	259-62
x 12	259-72
x 14	259-82
x 16	260-02
x 20	260-22

+PWH

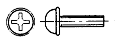

7-682-□□□-□□

Size	Parts No.
2.6 × 4	902-01
× 5	902-11
× 6	902-21
× 8	902-31
× 10	
× 12	902-51
× 14	
3 × 5	903-01
× 6	903-11
× 8	903-21
× 10	903-31
× 12	903-41
× 14	
4 × 6	904-01
× 8	904-11
× 10	904-21
× 12	904-31
× 14	904-41
× 16	
× 20	

+PSW
Czn-N

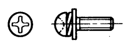

7-682-□□□-□□

SIZE	Parts No.
3 x 6	947-01
x 8	948-01
x 10	949-01
x 12	950-01
x 14	951-01
x 16	952-01
x 20	953-01
x 25	954-01
x 30	955-01
x 35	956-01
x 40	957-01
4 x 8	961-01
x 10	962-01
x 12	963-01
x 14	964-01
x 16	965-01
x 20	966-01
x 25	967-01
x 30	968-01
x 35	969-01
x 40	970-01

+PS
Czn-N

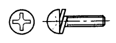

7-628-□□□-□□

Size	Parts No.
2 × 4	255-20
× 5	283-00
× 6	255-40
× 8	255-50
× 10	283-10
× 12	283-70
2.6 × 4	284-00
× 5	284-10
× 6	284-20
× 8	284-30
× 10	284-40
× 12	259-70
× 14	259-80
× 16	260-00
× 20	260-20

+K
Bzn-N

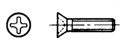

7-682-□□□-□□

SIZE	Parts No.
3 x 4	245-09
x 5	246-09
x 6	247-09
x 8	248-09
x 10	249-09
x 12	250-09
x 14	251-09
x 16	252-09
x 20	253-09
4 x 6	260-09
x 8	261-09
x 10	262-09
x 12	263-09
x 14	264-09
x 16	265-09
x 20	266-09
5 x 8	274-09
x 10	275-09
x 12	276-09
x 14	277-09
x 16	278-09
x 20	279-09
x 25	280-09
x 30	281-09
x 35	282-09
x 40	283-09
x 45	284-09
x 50	285-09

+RK
Cr-N

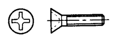

7-682-□□□-□□

Size	Parts No.
3 × 4	245-04
× 5	246-04
× 6	247-04
× 8	248-04
× 10	249-04
× 12	350-04
× 14	351-04
× 16	352-04
× 20	353-04
4 × 6	360-04
× 8	361-04
× 10	362-04
× 12	363-04
× 14	364-04
× 16	365-04
× 20	366-04
× 25	367-04
× 30	368-04
× 35	369-04
× 40	370-04
5 × 8	374-04
× 10	375-04
× 12	376-04
× 14	377-04
× 16	378-04
× 20	379-04

+K
Cr-N

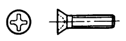

7-682-□□□-□□

SIZE	Parts No.
3 x 4	245-04
x 5	246-04
x 6	247-04
x 8	248-04
x 10	249-04
x 12	250-04
x 14	251-04
x 16	252-04
x 20	253-04
4 x 6	260-04
x 8	261-04
x 10	262-04
x 12	263-04
x 14	264-04
x 16	265-04
x 20	266-04

+BTP
Bzn-N NON-SLIT

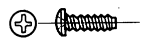

7-685-□□□-□□

SIZE	Parts No.
2.6 x 4	531-19
2.6 x 5	532-19
2.6 x 6	533-19
2.6 x 8	534-19
2.6 x 10	535-19
2.6 x 12	536-19
2.6 x 14	537-19
2.6 x 16	538-19
3 x 5	544-19
3 x 6	545-19
3 x 8	546-19
3 x 10	547-19
3 x 12	548-19
3 x 14	549-19
3 x 16	550-19
3 x 20	551-19
3 x 25	552-19
3 x 30	553-19
3 x 35	554-19
3 x 40	555-19
3 x 45	–
3 x 50	596-19
3 x 60	–

CAPACITOR, CHIP CERAMIC

Part No.	SP	Description
1-163-083-00	s	CAP, CHIP CERAMIC 1pF +-0.25pF 50V
1-163-085-00	s	CAP, CHIP CERAMIC 2pF +-0.25pF 50V
1-163-087-00	s	CAP, CHIP CERAMIC 4pF +-0.25pF 50V
1-163-089-00	s	CAP, CHIP CERAMIC 6pF +-0.5pF 50V
1-163-091-00	s	CAP, CHIP CERAMIC 8pF +-0.5pF 50V
1-163-093-00	s	CAP, CHIP CERAMIC 10pF 5% 50V
1-163-097-00	s	CAP, CHIP CERAMIC 15pF 5% 50V
1-163-101-00	s	CAP, CHIP CERAMIC 22pF 5% 50V
1-163-105-00	s	CAP, CHIP CERAMIC 33pF 5% 50V
1-163-109-00	s	CAP, CHIP CERAMIC 47pF 5% 50V
1-163-113-00	s	CAP, CHIP CERAMIC 68pF 5% 50V
1-163-117-00	s	CAP, CHIP CERAMIC 100pF 5% 50V
1-163-121-00	s	CAP, CHIP CERAMIC 150pF 5% 50V
1-163-125-00	s	CAP, CHIP CERAMIC 220pF 5% 50V
1-163-129-00	s	CAP, CHIP CERAMIC 330pF 5% 50V
1-163-133-00	s	CAP, CHIP CERAMIC 470pF 5% 50V
1-163-137-00	s	CAP, CHIP CERAMIC 680pF 5% 50V
1-163-141-00	s	CAP, CHIP CERAMIC 1000pF 5% 50V
1-163-145-00	s	CAP, CHIP CERAMIC 1500pF 10% 50V
1-164-161-11	s	CAP, CHIP CERAMIC 2200pF 10% 100V
1-164-182-11	s	CAP, CHIP CERAMIC 3300pF 10% 100V
1-163-017-00	s	CAP, CHIP CERAMIC 4700pF 10% 50V
1-163-019-00	s	CAP, CHIP CERAMIC 6800pF 10% 50V
1-164-232-11	s	CAP, CHIP CERAMIC 0.01 20% 100V
1-163-023-00	s	CAP, CHIP CERAMIC 0.015 10% 50V
1-163-034-00	s	CAP, CHIP CERAMIC 0.033 50V
1-163-035-00	s	CAP, CHIP CERAMIC 0.047 50V
1-163-036-00	s	CAP, CHIP CERAMIC 0.068 50V
1-163-038-00	s	CAP, CHIP CERAMIC 0.1 50V

CAPACITOR, ELECTROLYTIC

Part No.	SP	Description
1-124-902-00	s	CAP, ELECT 0.47 20% 50V
1-124-791-11	s	CAP, ELECT 1.0 20% 100V
1-124-925-11	s	CAP, ELECT 2.2 20% 100V
1-123-382-00	s	CAP, ELECT 3.3 20% 100V
1-124-927-00	s	CAP, ELECT 4.7 20% 100V
1-123-875-91	s	CAP, ELECT 10 20% 50V
1-124-915-11	s	CAP, ELECT 10 20% 63V
1-124-667-11	s	CAP, ELECT 10 20% 100V
1-124-908-11	s	CAP, ELECT 22 20% 50V
1-124-916-11	s	CAP, ELECT 22 20% 63V
1-124-929-11	s	CAP, ELECT 22 20% 100V
1-124-963-11	s	CAP, ELECT 33 20% 16V
1-124-482-11	s	CAP, ELECT 33 20% 35V
1-124-917-11	s	CAP, ELECT 33 20% 63V
1-124-930-11	s	CAP, ELECT 33 20% 100V
1-124-446-11	s	CAP, ELECT 47 20% 10V
1-124-477-11	s	CAP, ELECT 47 20% 25V
1-124-910-11	s	CAP, ELECT 47 20% 50V
1-124-918-11	s	CAP, ELECT 47 20% 63V
1-124-931-11	s	CAP, ELECT 47 20% 100V
1-124-443-00	s	CAP, ELECT 100 20% 10V
1-126-101-11	s	CAP, ELECT 100 20% 16V
1-124-478-11	s	CAP, ELECT 100 20% 25V
1-124-122-11	s	CAP, ELECT 100 20% 50V
1-124-572-11	s	CAP, ELECT 100 20% 63V
1-123-605-00	s	CAP, ELECT 100 20% 100V
1-124-444-00	s	CAP, ELECT 220 20% 10V
1-124-120-11	s	CAP, ELECT 220 20% 25V
1-124-484-11	s	CAP, ELECT 220 20% 35V
1-124-911-11	s	CAP, ELECT 220 20% 50V
1-124-919-51	s	CAP, ELECT 220 20% 63V
1-124-628-11	s	CAP, ELECT 220 20% 100V
1-124-442-00	s	CAP, ELECT 330 20% 6.3V
1-124-604-00	s	CAP, ELECT 330 20% 10V
1-124-119-00	s	CAP, ELECT 330 20% 16V
1-124-479-11	s	CAP, ELECT 330 20% 25V
1-124-485-11	s	CAP, ELECT 330 20% 35V
1-124-912-11	s	CAP, ELECT 330 20% 50V
1-124-472-11	s	CAP, ELECT 470 20% 10V
1-124-475-11	s	CAP, ELECT 470 20% 16V
1-124-480-11	s	CAP, ELECT 470 20% 25V
1-126-104-11	s	CAP, ELECT 470 20% 35V
1-124-913-11	s	CAP, ELECT 470 20% 50V
1-124-921-11	s	CAP, ELECT 470 20% 63V
1-124-471-00	s	CAP, ELECT 1000 20% 6.3V
1-124-473-11	s	CAP, ELECT 1000 20% 10V
1-124-555-00	s	CAP, ELECT 1000 20% 16V
1-124-557-11	s	CAP, ELECT 1000 20% 25V
1-126-105-11	s	CAP, ELECT 1000 20% 35V
1-124-637-11	s	CAP, ELECT 1000 20% 50V
1-124-922-11	s	CAP, ELECT 1000 20% 63V
1-124-893-11	s	CAP, ELECT 2200 20% 10V
1-124-556-11	s	CAP, ELECT 2200 20% 16V
1-124-563-11	s	CAP, ELECT 2200 20% 25V
1-124-618-11	s	CAP, ELECT 2200 20% 35V

CAPACITOR, ELECTROLYTIC

Part No.	SP	Description
1-124-607-11	s	CAP, ELECT 2200 20% 50V
1-124-621-11	s	CAP, ELECT 3300 20% 6.3V
1-124-887-00	s	CAP, ELECT 3300 20% 16V
1-124-636-00	s	CAP, ELECT 3300 20% 25V
1-124-762-00	s	CAP, ELECT 4700 20% 10V
1-124-898-11	s	CAP, ELECT 4700 20% 16V
1-124-564-11	s	CAP, ELECT 4700 20% 25V
1-124-891-11	s	CAP, ELECT 10000 20% 6.3V
1-124-763-00	s	CAP, ELECT 10000 20% 10V

CAPACITOR, ELECTROLYTIC

Part No.	SP	Description
1-124-902-00	s	CAP, ELECT 0.47 20% 50V
1-124-791-11	s	CAP, ELECT 1.0 20% 100V
1-124-925-11	s	CAP, ELECT 2.2 20% 100V
1-123-382-00	s	CAP, ELECT 3.3 20% 100V
1-124-927-00	s	CAP, ELECT 4.7 20% 100V
1-123-875-91	s	CAP, ELECT 10 20% 50V
1-124-908-11	s	CAP, ELECT 22 20% 50V
1-124-963-11	s	CAP, ELECT 33 20% 16V
1-124-482-11	s	CAP, ELECT 33 20% 35V
1-124-917-11	s	CAP, ELECT 33 20% 63V
1-124-446-11	s	CAP, ELECT 47 20% 10V
1-124-477-11	s	CAP, ELECT 47 20% 25V
1-124-910-11	s	CAP, ELECT 47 20% 50V
1-124-443-00	s	CAP, ELECT 100 20% 10V
1-126-101-11	s	CAP, ELECT 100 20% 16V
1-124-478-11	s	CAP, ELECT 100 20% 25V
1-124-122-11	s	CAP, ELECT 100 20% 50V
1-124-444-00	s	CAP, ELECT 220 20% 10V
1-124-120-11	s	CAP, ELECT 220 20% 25V
1-124-484-11	s	CAP, ELECT 220 20% 35V
1-124-911-11	s	CAP, ELECT 220 20% 50V
1-124-442-00	s	CAP, ELECT 330 20% 6.3V
1-124-604-00	s	CAP, ELECT 330 20% 10V
1-124-119-00	s	CAP, ELECT 330 20% 16V
1-124-479-11	s	CAP, ELECT 330 20% 25V
1-124-485-11	s	CAP, ELECT 330 20% 35V
1-124-912-11	s	CAP, ELECT 330 20% 50V
1-124-472-11	s	CAP, ELECT 470 20% 10V
1-124-475-11	s	CAP, ELECT 470 20% 16V
1-124-480-11	s	CAP, ELECT 470 20% 25V
1-126-104-11	s	CAP, ELECT 470 20% 35V
1-124-913-11	s	CAP, ELECT 470 20% 50V

RESISTOR, CHIP METAL

Part No.	SP	Description
1-216-603-11	s	RES, CHIP METAL 10 1% 1/10W
1-216-605-11	s	RES, CHIP METAL 12 1% 1/10W
1-216-609-11	s	RES, CHIP METAL 18 1% 1/10W
1-216-611-11	s	RES, CHIP METAL 22 1% 1/10W
1-216-614-11	s	RES, CHIP METAL 30 1% 1/10W
1-216-617-11	s	RES, CHIP METAL 39 1% 1/10W
1-216-619-11	s	RES, CHIP METAL 47 1% 1/10W
1-216-620-11	s	RES, CHIP METAL 51 1% 1/10W
1-216-623-11	s	RES, CHIP METAL 68 1% 1/10W
1-216-624-11	s	RES, CHIP METAL 75 1% 1/10W
1-216-625-11	s	RES, CHIP METAL 82 1% 1/10W
1-216-626-11	s	RES, CHIP METAL 91 1% 1/10W
1-216-627-11	s	RES, CHIP METAL 100 1% 1/10W
1-216-629-11	s	RES, CHIP METAL 120 1% 1/10W
1-216-631-11	s	RES, CHIP METAL 150 1% 1/10W
1-216-633-11	s	RES, CHIP METAL 180 1% 1/10W
1-216-634-11	s	RES, CHIP METAL 200 1% 1/10W
1-216-635-11	s	RES, CHIP METAL 220 1% 1/10W
1-216-636-11	s	RES, CHIP METAL 240 1% 1/10W
1-216-637-11	s	RES, CHIP METAL 270 1% 1/10W
1-216-638-11	s	RES, CHIP METAL 300 1% 1/10W
1-216-639-11	s	RES, CHIP METAL 330 1% 1/10W
1-216-640-11	s	RES, CHIP METAL 360 1% 1/10W
1-216-641-11	s	RES, CHIP METAL 390 1% 1/10W
1-216-642-11	s	RES, CHIP METAL 430 1% 1/10W
1-216-643-11	s	RES, CHIP METAL 470 1% 1/10W
1-216-644-11	s	RES, CHIP METAL 510 1% 1/10W
1-216-645-11	s	RES, CHIP METAL 560 1% 1/10W
1-216-647-11	s	RES, CHIP METAL 680 1% 1/10W
1-216-648-11	s	RES, CHIP METAL 750 1% 1/10W
1-216-649-11	s	RES, CHIP METAL 820 1% 1/10W
1-216-650-11	s	RES, CHIP METAL 910 1% 1/10W
1-216-651-11	s	RES, CHIP METAL 1.0k 1% 1/10W
1-216-652-11	s	RES, CHIP METAL 1.1k 1% 1/10W
1-216-653-11	s	RES, CHIP METAL 1.2k 1% 1/10W
1-216-655-11	s	RES, CHIP METAL 1.5k 1% 1/10W
1-216-656-11	s	RES, CHIP METAL 1.6k 1% 1/10W
1-216-657-11	s	RES, CHIP METAL 1.8k 1% 1/10W
1-216-658-11	s	RES, CHIP METAL 2k 1% 1/10W
1-216-659-11	s	RES, CHIP METAL 2.2k 1% 1/10W
1-216-660-11	s	RES, CHIP METAL 2.4k 1% 1/10W
1-216-661-11	s	RES, CHIP METAL 2.7k 1% 1/10W
1-216-662-11	s	RES, CHIP METAL 3k 1% 1/10W
1-216-663-11	s	RES, CHIP METAL 3.3k 1% 1/10W
1-216-664-11	s	RES, CHIP METAL 3.5k 1% 1/10W
1-216-665-11	s	RES, CHIP METAL 3.9k 1% 1/10W
1-216-666-11	s	RES, CHIP METAL 4.3k 1% 1/10W
1-216-667-11	s	RES, CHIP METAL 4.7k 1% 1/10W
1-216-668-11	s	RES, CHIP METAL 5.1k 1% 1/10W
1-216-669-11	s	RES, CHIP METAL 5.6k 1% 1/10W

RESISTOR, CHIP METAL

Part No.	SP	Description
1-216-670-11	s	RES, CHIP METAL 6.2k 1% 1/10W
1-216-671-11	s	RES, CHIP METAL 6.8k 1% 1/10W
1-216-672-11	s	RES, CHIP METAL 7.5k 1% 1/10W
1-216-673-11	s	RES, CHIP METAL 8.2k 1% 1/10W
1-216-674-11	s	RES, CHIP METAL 9.1k 1% 1/10W
1-216-675-11	s	RES, CHIP METAL 10k 1% 1/10W
1-216-676-11	s	RES, CHIP METAL 11k 1% 1/10W
1-216-677-11	s	RES, CHIP METAL 12k 1% 1/10W
1-216-678-11	s	RES, CHIP METAL 13k 1% 1/10W
1-216-679-11	s	RES, CHIP METAL 15k 1% 1/10W
1-216-680-11	s	RES, CHIP METAL 16k 1% 1/10W
1-216-681-11	s	RES, CHIP METAL 18k 1% 1/10W
1-216-682-11	s	RES, CHIP METAL 20k 1% 1/10W
1-216-683-11	s	RES, CHIP METAL 22k 1% 1/10W
1-216-684-11	s	RES, CHIP METAL 24k 1% 1/10W
1-216-685-11	s	RES, CHIP METAL 27k 1% 1/10W
1-216-686-11	s	RES, CHIP METAL 30k 1% 1/10W
1-216-687-11	s	RES, CHIP METAL 33k 1% 1/10W
1-216-688-11	s	RES, CHIP METAL 36k 1% 1/10W
1-216-689-11	s	RES, CHIP METAL 39k 1% 1/10W
1-216-690-11	s	RES, CHIP METAL 43k 1% 1/10W
1-216-691-11	s	RES, CHIP METAL 49k 1% 1/10W
1-216-692-11	s	RES, CHIP METAL 51k 1% 1/10W
1-216-693-11	s	RES, CHIP METAL 56k 1% 1/10W
1-216-694-11	s	RES, CHIP METAL 62k 1% 1/10W
1-216-695-11	s	RES, CHIP METAL 68k 1% 1/10W
1-216-696-11	s	RES, CHIP METAL 75k 1% 1/10W
1-216-697-11	s	RES, CHIP METAL 82k 1% 1/10W
1-216-698-11	s	RES, CHIP METAL 91k 1% 1/10W
1-216-699-11	s	RES, CHIP METAL 100k 1% 1/10W

INDUCTOR, MICRO

Part No.	SP	Description
1-408-876-00	s	INDUCTOR, MICRO 0.18 5%
1-408-877-00	s	INDUCTOR, MICRO 0.22 5%
1-408-878-00	s	INDUCTOR, MICRO 0.33 5%
1-408-879-21	s	INDUCTOR, MICRO 0.47 5%
1-408-931-00	s	INDUCTOR, MICRO 0.56 5%
1-408-880-00	s	INDUCTOR, MICRO 0.68 5%
1-408-763-00	s	INDUCTOR, MICRO 0.82 5%
1-408-397-00	s	INDUCTOR, MICRO 1.0 5%
1-408-398-00	s	INDUCTOR, MICRO 1.2 5%
1-408-399-00	s	INDUCTOR, MICRO 1.5 5%
1-408-400-00	s	INDUCTOR, MICRO 1.8 5%
1-408-401-00	s	INDUCTOR, MICRO 2.2 5%
1-408-402-00	s	INDUCTOR, MICRO 2.7 5%
1-408-403-00	s	INDUCTOR, MICRO 3.3 5%
1-408-404-00	s	INDUCTOR, MICRO 3.9 5%
1-408-405-00	s	INDUCTOR, MICRO 4.7 5%
1-408-406-00	s	INDUCTOR, MICRO 5.6 5%
1-408-407-00	s	INDUCTOR, MICRO 6.8 5%
1-408-408-00	s	INDUCTOR, MICRO 8.2 5%
1-408-409-00	s	INDUCTOR, MICRO 10 5%
1-408-410-00	s	INDUCTOR, MICRO 12 5%
1-408-411-00	s	INDUCTOR, MICRO 15 5%
1-408-412-00	s	INDUCTOR, MICRO 18 5%
1-408-413-00	s	INDUCTOR, MICRO 22 5%
1-408-414-00	s	INDUCTOR, MICRO 27 5%
1-408-415-00	s	INDUCTOR, MICRO 33 5%
1-408-416-00	s	INDUCTOR, MICRO 39 5%
1-408-417-21	s	INDUCTOR, MICRO 47 5%
1-408-418-00	s	INDUCTOR, MICRO 56 5%
1-408-419-00	s	INDUCTOR, MICRO 68 5%
1-408-420-00	s	INDUCTOR, MICRO 82 5%
1-408-421-00	s	INDUCTOR, MICRO 100 5%
1-408-422-00	s	INDUCTOR, MICRO 120 5%
1-408-423-00	s	INDUCTOR, MICRO 150 5%
1-408-424-00	s	INDUCTOR, MICRO 180 5%
1-408-425-00	s	INDUCTOR, MICRO 220 5%
1-408-426-00	s	INDUCTOR, MICRO 270 5%
1-408-427-00	s	INDUCTOR, MICRO 330 5%
1-408-428-00	s	INDUCTOR, MICRO 390 5%
1-408-429-00	s	INDUCTOR, MICRO 470 5%

AU-135 BOARD

Ref. No. or Q'ty	Part No.	SP	Description
1pc	A-7515-183-A	o	MOUNTED CIRCUIT BOARD, AU-135
6pcs	3-621-124-00	o	SPACER
4pcs	7-626-320-11	s	PIN, SPRING 3X8
2pcs	7-685-870-04	s	SCREW +BVTT 3X5 (S)
C4	1-131-347-00	s	TANTALUM 1uF 10% 35V
C13	1-131-347-00	s	TANTALUM 1uF 10% 35V
C23	1-131-347-00	s	TANTALUM 1uF 10% 35V
C35	1-107-165-00	s	MICA 56PF 5% 50V
C39	1-107-077-00	s	MICA 47PF 5% 50V
C43	1-131-379-00	s	TANTALUM 22uF 10% 10V
C44	1-131-347-00	s	TANTALUM 1uF 10% 35V
C46	1-131-379-00	s	TANTALUM 22uF 10% 10V
C49	1-131-347-00	s	TANTALUM 1uF 10% 35V
C55	1-131-379-00	s	TANTALUM 22uF 10% 10V
C56	1-131-347-00	s	TANTALUM 1uF 10% 35V
C58	1-131-379-00	s	TANTALUM 22uF 10% 10V
C77	1-130-499-00	s	MYLAR 0.22uF 5% 50V
C79	1-130-499-00	s	MYLAR 0.22uF 5% 50V
C81	1-130-499-00	s	MYLAR 0.22uF 5% 50V
C83	1-130-499-00	s	MYLAR 0.22uF 5% 50V
C85	1-130-499-00	s	MYLAR 0.22uF 5% 50V
C87	1-130-499-00	s	MYLAR 0.22uF 5% 50V
C89	1-130-499-00	s	MYLAR 0.22uF 5% 50V
C91	1-130-499-00	s	MYLAR 0.22uF 5% 50V
C98	1-131-347-00	s	TANTALUM 1uF 10% 35V
C99	1-163-038-00	s	CERAMIC CHIP 0.1uF 25V
C101	1-124-589-11	s	ELECT 47uF 20% 10V
C104	1-124-589-11	s	ELECT 47uF 20% 10V
C105	1-124-589-11	s	ELECT 47uF 20% 10V
C108	1-124-273-00	s	ELECT, NONPOLAR 3.3uF 20% 50V
C110	1-124-248-00	s	ELECT 22uF 20% 35V
C112	1-124-248-00	s	ELECT 22uF 20% 35V
C113	1-124-584-00	s	ELECT 100uF 20% 10V
C114	1-124-584-00	s	ELECT 100uF 20% 10V
C115	1-124-584-00	s	ELECT 100uF 20% 10V
C116	1-124-584-00	s	ELECT 100uF 20% 10V
C201	1-124-589-11	s	ELECT 47uF 20% 10V
C204	1-124-589-11	s	ELECT 47uF 20% 10V
C205	1-124-589-11	s	ELECT 47uF 20% 10V
C208	1-124-273-00	s	ELECT, NONPOLAR 3.3uF 20% 50V
C210	1-124-248-00	s	ELECT 22uF 20% 35V
C212	1-124-248-00	s	ELECT 22uF 20% 35V
C213	1-124-584-00	s	ELECT 100uF 20% 10V
C214	1-124-584-00	s	ELECT 100uF 20% 10V
C215	1-124-584-00	s	ELECT 100uF 20% 10V
C216	1-124-584-00	s	ELECT 100uF 20% 10V
C233	1-131-368-00	s	TANTALUM 3.3uF 10% 16V
CN1	1-580-098-11	o	CONNECTOR, 50P
CNI7	1-526-653-21	s	SOCKET, IC (DP) 14P
CNI71	1-526-653-21	s	SOCKET, IC (DP) 14P
CP1	1-579-077-11	s	OSCILLATOR, CRYSTAL
CP2	1-577-596-11	s	OSCILLATOR, CRYSTAL
CP101	1-464-947-11	s	FILTER UNIT, LOW PASS
CP201	1-464-947-11	s	FILTER UNIT, LOW PASS
D1	8-719-107-23	s	DIODE RD20M-T1B1
D2	8-719-107-23	s	DIODE RD20M-T1B1
D3	8-719-118-38	s	DIODE 1SZ46A

(AU-135 BOARD)

Ref. No. or Q'ty	Part No.	SP	Description
D4	8-719-105-72	s	DIODE RD4.7M-B1
D5	8-719-105-72	s	DIODE RD4.7M-B1
D6	8-719-105-72	s	DIODE RD4.7M-B1
D7	8-719-105-72	s	DIODE RD4.7M-B1
D9	8-719-800-76	s	DIODE 1SS226
D10	8-719-800-76	s	DIODE 1SS226
D11	8-719-800-76	s	DIODE 1SS226
D12	8-719-800-76	s	DIODE 1SS226
D13	8-719-800-76	s	DIODE 1SS226
D14	8-719-800-76	s	DIODE 1SS226
D15	8-719-800-76	s	DIODE 1SS226
D16	8-719-800-76	s	DIODE 1SS226
D17	8-719-800-99	s	DIODE TLG223
D18	8-719-800-99	s	DIODE TLG223
D19	8-719-800-99	s	DIODE TLG223
D20	8-719-800-99	s	DIODE TLG223
D21	8-719-800-99	s	DIODE TLG223
D22	8-719-800-99	s	DIODE TLG223
D23	8-719-801-26	s	DIODE TLR223
D24	8-719-118-38	s	DIODE 1SZ46A
D25	8-719-800-76	s	DIODE 1SS226
D26	8-719-948-47	s	DIODE HSM88AS
D27	8-719-948-47	s	DIODE HSM88AS
D28	8-719-948-47	s	DIODE HSM88AS
D29	8-719-948-47	s	DIODE HSM88AS
D101	8-719-911-19	s	DIODE 1SS119
D102	8-719-911-19	s	DIODE 1SS119
D103	8-719-911-19	s	DIODE 1SS119
D104	8-719-911-19	s	DIODE 1SS119
D105	8-719-107-23	s	DIODE RD20M-B1
D106	8-719-107-23	s	DIODE RD20M-B1
D107	8-719-107-23	s	DIODE RD20M-B1
D108	8-719-107-23	s	DIODE RD20M-B1
D201	8-719-911-19	s	DIODE 1SS119
D202	8-719-911-19	s	DIODE 1SS119
D203	8-719-911-19	s	DIODE 1SS119
D204	8-719-911-19	s	DIODE 1SS119
D205	8-719-107-23	s	DIODE RD20M-B1
D206	8-719-107-23	s	DIODE RD20M-B1
D207	8-719-107-23	s	DIODE RD20M-B1
D208	8-719-107-23	s	DIODE RD20M-B1
DL1	1-415-539-11	s	DELAY LINE, ACTIVE
IC1	8-759-906-53	s	IC TL062CPS
IC2	8-759-906-53	s	IC TL062CPS
IC3	8-759-906-53	s	IC TL062CPS
IC4	8-759-001-98	s	IC MC10198L
IC5	8-759-001-25	s	IC MC10125L
IC6	8-759-907-81	s	IC SN74LS221NS
IC7	8-759-721-49	s	IC EPM5032DC-AU2
IC8	8-759-918-71	s	IC CX23065
IC9	8-759-906-53	s	IC TL062CPS
IC10	8-759-925-74	s	IC SN74HC04NS
IC11	8-759-947-23	s	IC TL721CP
IC12	8-759-925-90	s	IC SN74HC74NS
IC13	8-759-151-25	s	IC CXD8138Q
IC14	8-759-918-71	s	IC CX23065
IC15	8-759-906-53	s	IC TL062CPS

Please see pages D-13 to D-15 for the part numbers of capacitors and resistors that are not listed in the parts list.

(AU-135 BOARD)

Ref. No. or Q'ty	Part No.	SP	Description
IC16	8-759-925-90	s	IC SN74HC74NS
IC17	8-759-926-17	s	IC SN74HC153NS
IC18	8-759-925-76	s	IC SN74HC08NS
IC19	8-759-925-76	s	IC SN74HC08NS
IC20	8-759-925-76	s	IC SN74HC08NS
IC21	8-759-645-17	s	IC M54517P
IC22	8-759-925-83	s	IC SN74HC27NS
IC23	8-759-926-24	s	IC SN74HC164NS
IC24	8-759-926-24	s	IC SN74HC164NS
IC25	8-759-925-81	s	IC SN74HC20NS
IC26	8-759-925-74	s	IC SN74HC04NS
IC27	8-759-927-46	s	IC SN74HC00NS
IC28	8-759-925-90	s	IC SN74HC74NS
IC29	8-759-947-57	s	IC CXD1136Q
IC30	8-759-923-65	s	IC AM26LS31CNS
IC31	8-759-011-65	s	IC MC74HC4053F
IC32	8-759-945-98	s	IC CXD1146Q
IC33	8-759-989-91	s	IC TL7705ACPS
IC40	8-759-928-09	s	IC TLC27M2CPS
IC101	8-759-938-46	s	IC PCM56P-JS
IC102	8-759-700-96	s	IC NJM5534M
IC103	8-759-981-57	s	IC RC2043DD
IC104	8-759-982-03	s	IC RC5532DD
IC105	8-759-982-03	s	IC RC5532DD
IC201	8-759-938-46	s	IC PCM56P-JS
IC202	8-759-700-96	s	IC NJM5534M
IC203	8-759-981-57	s	IC RC2043DD
IC204	8-759-982-03	s	IC RC5532DD
IC205	8-759-982-03	s	IC RC5532DD
L1	1-410-284-11	s	10uH (WITH CORE)
L2	1-410-284-11	s	10uH (WITH CORE)
L3	1-410-284-11	s	10uH (WITH CORE)
L4	1-410-284-11	s	10uH (WITH CORE)
L5	1-410-284-11	s	10uH (WITH CORE)
L6	1-410-284-11	s	10uH (WITH CORE)
L7	1-410-284-11	s	10uH (WITH CORE)
L8	1-410-284-11	s	10uH (WITH CORE)
L9	1-410-284-11	s	10uH (WITH CORE)
L10	1-410-284-11	s	10uH (WITH CORE)
L11	1-410-284-11	s	10uH (WITH CORE)
L12	1-410-284-11	s	10uH (WITH CORE)
PH101	8-759-420-80	s	IC AQV203A
PH102	8-759-420-80	s	IC AQV203A
PH103	8-759-420-80	s	IC AQV203A
PH104	8-759-420-80	s	IC AQV203A
PH201	8-759-420-80	s	IC AQV203A
PH202	8-759-420-80	s	IC AQV203A
PH203	8-759-420-80	s	IC AQV203A
PH204	8-759-420-80	s	IC AQV203A
Q1	8-729-105-29	s	TRANSISTOR 2SA1385
Q2	8-729-205-88	s	TRANSISTOR 2SC3074-Y
Q3	8-729-113-33	s	TRANSISTOR 2SB733-4
Q4	8-729-177-33	s	TRANSISTOR 2SD773-4
Q5	8-729-113-33	s	TRANSISTOR 2SB733-4
Q6	8-729-177-33	s	TRANSISTOR 2SD773-4
Q7	8-729-140-36	s	TRANSISTOR 2SC3734-B23
Q8	8-729-420-14	s	TRANSISTOR 2SK614
Q9	8-729-901-05	s	TRANSISTOR DTA124EK-T146

Please see pages D-13 to D-15 for the part numbers of capacitors and resistors that are not listed in the parts list.

(AU-135 BOARD)

Ref. No. or Q'ty	Part No.	SP	Description
Q10	8-729-102-51	s	TRANSISTOR 2SC2759-U22
Q11	8-729-102-51	s	TRANSISTOR 2SC2759-U22
Q101	8-729-230-31	s	TRANSISTOR 2SC3074LB
Q102	8-729-230-32	s	TRANSISTOR 2SA1244LB
Q103	8-729-230-31	s	TRANSISTOR 2SC3074LB
Q104	8-729-230-32	s	TRANSISTOR 2SA1244LB
Q201	8-729-230-31	s	TRANSISTOR 2SC3074LB
Q202	8-729-230-32	s	TRANSISTOR 2SA1244LB
Q203	8-729-230-31	s	TRANSISTOR 2SC3074LB
Q204	8-729-230-32	s	TRANSISTOR 2SA1244LB
R32	1-216-675-11	s	METAL CHIP 10K 0.5% 1/10W
R51	1-216-121-00	s	METAL CHIP 1M 5% 1/10W
R60	1-216-121-00	s	METAL CHIP 1M 5% 1/10W
R62	1-216-121-00	s	METAL CHIP 1M 5% 1/10W
R101	1-216-105-00	s	METAL CHIP 220K 5% 1/10W
R102	1-216-113-00	s	METAL CHIP 470K 5% 1/10W
R103	1-216-119-00	s	METAL CHIP 820K 5% 1/10W
R114	1-249-389-11	s	CARBON 4.7 5% 1/6W
R115	1-249-389-11	s	CARBON 4.7 5% 1/6W
R116	1-249-397-11	s	CARBON 22 5% 1/4W
R119	1-249-482-11	s	CARBON 4.7 5% 1/2W
R126	1-249-389-11	s	CARBON 4.7 5% 1/6W
R127	1-249-389-11	s	CARBON 4.7 5% 1/6W
R128	1-249-397-11	s	CARBON 22 5% 1/4W
R131	1-249-482-11	s	CARBON 4.7 5% 1/2W
R201	1-216-105-00	s	METAL CHIP 220K 5% 1/10W
R202	1-216-113-00	s	METAL CHIP 470K 5% 1/10W
R203	1-216-119-00	s	METAL CHIP 820K 5% 1/10W
R214	1-249-389-11	s	CARBON 4.7 5% 1/6W
R215	1-249-389-11	s	CARBON 4.7 5% 1/6W
R216	1-249-397-11	s	CARBON 22 5% 1/4W
R219	1-249-482-11	s	CARBON 4.7 5% 1/2W
R226	1-249-389-11	s	CARBON 4.7 5% 1/6W
R227	1-249-389-11	s	CARBON 4.7 5% 1/6W
R228	1-249-397-11	s	CARBON 22 5% 1/4W
R231	1-249-482-11	s	CARBON 4.7 5% 1/2W
RV1	1-228-458-00	s	RES, ADJ, METAL 5K
RV2	1-228-457-00	s	RES, ADJ, METAL 2K
RV3	1-228-457-00	s	RES, ADJ, METAL 2K
RV4	1-228-455-00	s	RES, ADJ, METAL 500
RV101	1-228-461-00	s	RES, ADJ, METAL 50K
RV102	1-228-460-00	s	RES, ADJ, METAL 20K
RV201	1-228-461-00	s	RES, ADJ, METAL 50K
RV202	1-228-460-00	s	RES, ADJ, METAL 20K
S1	1-570-611-11	s	SWITCH, TOGGLE
S2	1-570-610-11	s	SWITCH, TOGGLE

CT-129 BOARD

Ref. No. or Q'ty	Part No.	SP	Description
	A-7584-071-A	o	POWER ASSY A WITH CT-129/130, PS-227 BOARD
C51	1-130-471-00	s	MYLAR 0.001uF 5% 50V
C52	1-130-471-00	s	MYLAR 0.001uF 5% 50V
C55	1-130-471-00	s	MYLAR 0.001uF 5% 50V
C56	1-130-483-00	s	MYLAR 0.01uF 5% 50V
C57	1-130-495-00	s	MYLAR 0.1uF 5% 50V
C58	1-126-176-11	s	ELECT 220uF 20% 10V
CN51	1-565-244-11	o	CONNECTOR, 12P Serial No.10001 - 10199
	1-573-172-11	s	PIN, LINE ANGLE(SIL) 12P Serial No.10201 -
D51	8-719-210-21	s	DIODE 11EQS04
D52	8-719-210-21	s	DIODE 11EQS04
D53	8-719-210-21	s	DIODE 11EQS04
D54	8-719-210-21	s	DIODE 11EQS04
D55	8-719-210-21	s	DIODE 11EQS04
D56	8-719-210-21	s	DIODE 11EQS04
D57	8-719-911-19	s	DIODE 1SS119
D58	8-719-107-87	s	THYRISTOR 03P2M
D59	8-719-911-19	s	DIODE 1SS119
IC51	8-759-906-62	s	IC MB3759-SNY
L51	1-410-466-41	s	4.7uH
Q53	8-729-119-76	s	TRANSISTOR 2SA1175-E
R51	1-215-419-00	s	METAL 820 1% 1/6W
R52	1-215-425-00	s	METAL 1.5K 1% 1/6W
R53	1-249-417-11	s	CARBON 1K 5% 1/4W
R54	1-249-417-11	s	CARBON 1K 5% 1/4W
R55	1-215-445-00	s	METAL 10K 1% 1/6W
R56	1-249-433-11	s	CARBON 22K 5% 1/4W
R57	1-247-897-11	s	CARBON 560K 5% 1/4W
R58	1-249-437-11	s	CARBON 47K 5% 1/4W
R59	1-249-405-11	s	CARBON 100 5% 1/4W
R60	1-215-480-00	s	METAL 300K 1% 1/6W
R61	1-215-429-00	s	METAL 2.2K 1% 1/6W
R62	1-249-421-11	s	CARBON 2.2K 5% 1/4W
R63	1-249-421-11	s	CARBON 2.2K 5% 1/4W
R64	1-247-895-00	s	CARBON 470K 5% 1/4W
R65	1-249-425-11	s	CARBON 4.7K 5% 1/4W
R66	1-249-426-11	s	CARBON 5.6K 5% 1/4W
R67	1-249-426-11	s	CARBON 5.6K 5% 1/4W
R68	1-249-415-11	s	CARBON 680 5% 1/4W
R69	1-249-405-11	s	CARBON 100 5% 1/4W
R70	1-249-421-11	s	CARBON 2.2K 5% 1/4W
R71	1-215-481-00	s	METAL 330K 1% 1/6W

CT-130 BOARD

Ref. No. or Q'ty	Part No.	SP	Description
	A-7584-071-A	o	POWER ASSY A WITH CT-129/130, PS-227 BOARD
C301	1-130-495-00	s	MYLAR 0.1uF 5% 50V
C302	1-124-907-11	s	ELECT 10uF 20% 50V
C303	1-130-495-00	s	MYLAR 0.1uF 5% 50V
C304	1-130-495-00	s	MYLAR 0.1uF 5% 50V
C306	1-130-495-00	s	MYLAR 0.1uF 5% 50V
C307	1-124-907-11	s	ELECT 10uF 20% 50V
C308	1-124-906-11	s	ELECT 4.7uF 20% 50V
C309	1-130-495-00	s	MYLAR 0.1uF 5% 50V
C310	1-126-233-11	s	ELECT 22uF 20% 35V
C311	1-124-907-11	s	ELECT 10uF 20% 50V
C312	1-130-495-00	s	MYLAR 0.1uF 5% 50V
C313	1-124-903-11	s	ELECT 1uF 20% 50V
CN301	1-565-244-11	o	CONNECTOR, 12P Serial No.10001 - 10199
	1-573-171-11	s	PIN, LINE ANGLE(SIL) 11P Serial No.10201 -
D301	8-719-911-19	s	DIODE 1SS119
D302	8-719-911-19	s	DIODE 1SS119
D303	8-719-911-19	s	DIODE 1SS119
D304	8-719-911-19	s	DIODE 1SS119
D305	8-719-107-87	s	THYRISTOR 03P2M
D306	8-719-313-16	s	DIODE AU02A
D307	8-719-911-19	s	DIODE 1SS119
D308	8-719-911-19	s	DIODE 1SS119
D309	8-719-911-19	s	DIODE 1SS119
IC301	8-759-135-80	s	IC UPC358C
IC302	8-759-908-15	s	IC TL431CLP
IC303	8-759-135-80	s	IC UPC358C
IC304	8-759-103-93	s	IC UPC393C
IC305	8-759-135-80	s	IC UPC358C
Q301	8-729-119-76	s	TRANSISTOR 2SA1175-E
Q302	8-729-178-55	s	TRANSISTOR 2SC2785-E
Q303	8-729-178-55	s	TRANSISTOR 2SC2785-E
R301	1-249-437-11	s	CARBON 47K 5% 1/4W
R302	1-215-423-00	s	METAL 1.2K 1% 1/6W
R303	1-249-433-11	s	CARBON 22K 5% 1/4W
R304	1-249-437-11	s	CARBON 47K 5% 1/4W
R305	1-249-433-11	s	CARBON 22K 5% 1/4W
R306	1-249-437-11	s	CARBON 47K 5% 1/4W
R307	1-249-437-11	s	CARBON 47K 5% 1/4W
R308	1-249-417-11	s	CARBON 1K 5% 1/4W
R309	1-249-427-11	s	CARBON 6.8K 5% 1/4W
R310	1-249-437-11	s	CARBON 47K 5% 1/4W
R311	1-249-405-11	s	CARBON 100 5% 1/4W
R312	1-249-437-11	s	CARBON 47K 5% 1/4W
R313	1-249-437-11	s	CARBON 47K 5% 1/4W
R314	1-249-435-11	s	CARBON 33K 5% 1/4W
R315	1-249-405-11	s	CARBON 100 5% 1/4W
R316	1-249-429-11	s	CARBON 10K 5% 1/4W
R317	1-249-423-11	s	CARBON 3.3K 5% 1/4W
R318	1-249-435-11	s	CARBON 33K 5% 1/4W
R319	1-249-432-11	s	CARBON 18K 5% 1/4W
R320	1-249-433-11	s	CARBON 22K 5% 1/4W
R321	1-249-437-11	s	CARBON 47K 5% 1/4W
R322	1-249-437-11	s	CARBON 47K 5% 1/4W

Please see pages D-13 to D-15 for the part numbers of capacitors and resistors that are not listed in the parts list.

(CT-130 BOARD)

Ref. No. or Q'ty	Part No.	SP	Description
R323	1-249-429-11	s	CARBON 10K 5% 1/4W
R324	1-249-429-11	s	CARBON 10K 5% 1/4W
R325	1-249-437-11	s	CARBON 47K 5% 1/4W
R326	1-249-437-11	s	CARBON 47K 5% 1/4W
R327	1-249-437-11	s	CARBON 47K 5% 1/4W
R328	1-249-437-11	s	CARBON 47K 5% 1/4W
R329	1-249-435-11	s	CARBON 33K 5% 1/4W
R330	1-249-437-11	s	CARBON 47K 5% 1/4W
R331	1-249-439-11	s	CARBON 68K 5% 1/4W
R332	1-249-405-11	s	CARBON 100 5% 1/4W
R333	1-249-437-11	s	CARBON 47K 5% 1/4W
R334	1-249-437-11	s	CARBON 47K 5% 1/4W
R335	1-249-437-11	s	CARBON 47K 5% 1/4W
R336	1-249-429-11	s	CARBON 10K 5% 1/4W

DP-118 BOARD

Ref. No. or Q'ty	Part No.	SP	Description
1pc	1-635-701-11	o	PRINTED CIRCUIT BOARD, DP-118
2pcs	4-904-327-01	o	HOLDER, LED
CN1	1-506-631-11	o	CONNECTOR, 4P MALE
CN2	1-506-468-11	o	CONNECTOR, 3P, MALE
D1	8-719-820-95	s	DIODE TLGC135AP
D2	8-719-820-95	s	DIODE TLGC135AP
R1	1-249-405-11	s	CARBON 100 5% 1/4W
R2	1-249-405-11	s	CARBON 100 5% 1/4W

DP-152 BOARD

Ref. No. or Q'ty	Part No.	SP	Description
1pc	1-636-217-11	o	PRINTED CIRCUIT BOARD, DP-152
CN1	1-506-482-11	o	CONNECTOR, 3P, MALE
CN2	1-506-619-11	o	CONNECTOR, 8P FEMALE
D1	8-719-812-41	s	DIODE TLR124
D2	8-719-812-41	s	DIODE TLR124
D3	8-719-812-41	s	DIODE TLR124
D4	8-719-812-41	s	DIODE TLR124
R1	1-249-417-11	s	CARBON 1K 5% 1/4W
R2	1-249-417-11	s	CARBON 1K 5% 1/4W
R3	1-249-417-11	s	CARBON 1K 5% 1/4W
R4	1-249-417-11	s	CARBON 1K 5% 1/4W

EX-252 BOARD

Ref. No. or Q'ty	Part No.	SP	Description
1pc	A-7515-188-A	o	MOUNTED CIRCUIT BOARD, EX-252
4pcs	7-685-870-04	s	SCREW +BVTT 3X5 (S)
CN1	1-580-098-11	o	CONNECTOR, 50P
CN2	1-580-097-11	o	CONNECTOR, 50P
CN3	1-580-096-11	o	CONNECTOR, 50P

Please see pages D-13 to D-15 for the part numbers of capacitors and resistors that are not listed in the parts list.

LF-22 BOARD

Ref. No. or Q'ty	Part No.	SP	Description
1pc	A-7515-182-A	o	MOUNTED CIRCUIT BOARD, LF-22
C601	⚠1-136-951-11	s	FILM 0.1uF 20% 25V
C602	⚠1-136-951-11	s	FILM 0.1uF 20% 25V
C603	⚠1-136-951-11	s	FILM 0.1uF 20% 25V
C604	⚠1-136-951-11	s	FILM 0.1uF 20% 25V
C605	⚠1-136-951-11	s	FILM 0.1uF 20% 25V
C606	⚠1-162-599-12	s	CERAMIC 0.0047uF 20% 400V
C607	⚠1-162-599-12	s	CERAMIC 0.0047uF 20% 400V
C608	⚠1-162-599-12	s	CERAMIC 0.0047uF 20% 400V
C609	⚠1-162-599-12	s	CERAMIC 0.0047uF 20% 400V
CN601	1-535-419-00	o	TAB, FASTEN (PCB)
CN602	1-535-419-00	o	TAB, FASTEN (PCB)
CN603	1-535-419-00	o	TAB, FASTEN (PCB)
CN604	1-535-419-00	o	TAB, FASTEN (PCB)
CN605	1-506-467-11	o	CONNECTOR, 2P, MALE
D601	8-719-911-19	s	DIODE 1SS119
F601	⚠1-532-496-00	s	FUSE, THERMO
L601	1-424-402-11	s	FILTER, LINE
L602	⚠1-412-458-11	s	INDUCTOR (WITH CORE)
L603	⚠1-412-458-11	s	INDUCTOR (WITH CORE)
R601	1-205-967-11	s	WIREWOUND 4.7 20% 10W
R602	1-205-967-11	s	WIREWOUND 4.7 20% 10W
R603	1-202-847-00	s	COMP 560K 10% 1/2W
R604	1-202-847-00	s	COMP 560K 10% 1/2W
RY601	⚠1-515-450-00	s	RELAY, POWER

MB-294 BOARD

Ref. No. or Q'ty	Part No.	SP	Description
1pc	A-7515-185-A	o	MOUNTED CIRCUIT BOARD, MB-294
6pcs	7-685-870-04	s	SCREW +BVTT 3X5 (S)
CN1	1-580-097-11	o	CONNECTOR, 50P
CN2	1-580-097-11	o	CONNECTOR, 50P
CN3	1-564-862-11	o	CONNECTOR, 8P
CN4	1-564-862-11	o	CONNECTOR, 8P
CN5	1-506-641-11	o	CONNECTOR, 24P MALE
CN6	1-506-635-11	o	CONNECTOR, 12P MALE
CN7	1-506-633-11	o	CONNECTOR, 8P MALE
CN101	1-561-365-21	s	CONNECTOR, RF
CN201	1-561-365-21	s	CONNECTOR, RF
CN301	1-561-365-21	s	CONNECTOR, RF
CN401	1-561-365-21	s	CONNECTOR, RF
CN501	1-561-365-21	s	CONNECTOR, RF

Please see pages D-13 to D-15 for the part numbers of capacitors and resistors that are not listed in the parts list.

ORX-11 BOARD

Ref. No. or Q'ty	Part No.	SP	Description
1pc	A-7515-187-A	o	MOUNTED CIRCUIT BOARD, ORX-11
1pc	1-508-944-00	s	PIN
1pc	2-832-003-00	s	BUSH, INSULATING
2pcs	7-621-255-22	s	SCREW +P 2X4
1pc	7-623-924-01	s	WASHER 3.0, NYLONE
C1	1-127-518-11	s	ELECT(SOLID) 100uF 20% 16V
C2	1-127-518-11	s	ELECT(SOLID) 100uF 20% 16V
C4	1-131-349-00	s	TANTALUM 2.2uF 10% 35V
C8	1-127-531-11	s	ELECT 20 16V
C9	1-127-531-11	s	ELECT 20 16V
C10	1-126-233-11	s	ELECT 22uF 20% 35V
C102	1-126-233-11	s	ELECT 22uF 20% 35V
C105	1-131-367-00	s	TANTALUM 22uF 10% 16V
C106	1-163-086-00	s	CERAMIC CHIP 3PF 0.25PF 50V
C108	1-131-374-00	s	TANTALUM 33uF 10% 10V
C110	1-131-374-00	s	TANTALUM 33uF 10% 10V
C202	1-126-233-11	s	ELECT 22uF 20% 35V
C205	1-131-367-00	s	TANTALUM 22uF 10% 16V
C206	1-163-086-00	s	CERAMIC CHIP 3PF 0.25PF 50V
C208	1-131-374-00	s	TANTALUM 33uF 10% 10V
C210	1-131-374-00	s	TANTALUM 33uF 10% 10V
C302	1-126-233-11	s	ELECT 22uF 20% 35V
C305	1-131-367-00	s	TANTALUM 22uF 10% 16V
C306	1-163-086-00	s	CERAMIC CHIP 3PF 0.25PF 50V
C308	1-131-374-00	s	TANTALUM 33uF 10% 10V
C310	1-131-374-00	s	TANTALUM 33uF 10% 10V
C402	1-126-233-11	s	ELECT 22uF 20% 35V
C405	1-131-367-00	s	TANTALUM 22uF 10% 16V
C406	1-163-086-00	s	CERAMIC CHIP 3PF 0.25PF 50V
C408	1-131-374-00	s	TANTALUM 33uF 10% 10V
C410	1-131-374-00	s	TANTALUM 33uF 10% 10V
CN1	1-562-784-11	o	CONNECTOR, 18P
D1	8-719-118-38	s	DIODE 1SZ46A
D2	8-719-121-14	s	DIODE RD8.2ESL2
D3	8-719-121-14	s	DIODE RD8.2ESL2
D101	A-7615-184-A	s	PD ASSY
D201	A-7615-184-A	s	PD ASSY
D301	A-7615-184-A	s	PD ASSY
D401	A-7615-184-A	s	PD ASSY
IC1	8-759-906-53	s	IC TL062CPS
L1	1-421-957-11	s	COIL, CHOKE 30UH
L2	1-421-957-11	s	COIL, CHOKE 30UH
Q1	8-729-113-33	s	TRANSISTOR 2SB733-4
Q2	8-729-177-33	s	TRANSISTOR 2SD773-4
Q102	8-729-122-63	s	TRANSISTOR 2SA1226
Q103	8-729-119-28	s	TRANSISTOR 2SC2758-U18
Q104	8-729-112-65	s	TRANSISTOR 2SA1462
Q105	8-729-119-28	s	TRANSISTOR 2SC2758-U18
Q202	8-729-122-63	s	TRANSISTOR 2SA1226
Q203	8-729-119-28	s	TRANSISTOR 2SC2758-U18
Q204	8-729-112-65	s	TRANSISTOR 2SA1462
Q205	8-729-119-28	s	TRANSISTOR 2SC2758-U18
Q302	8-729-122-63	s	TRANSISTOR 2SA1226
Q303	8-729-119-28	s	TRANSISTOR 2SC2758-U18
Q304	8-729-112-65	s	TRANSISTOR 2SA1462
Q305	8-729-119-28	s	TRANSISTOR 2SC2758-U18
Q402	8-729-122-63	s	TRANSISTOR 2SA1226
Q403	8-729-119-28	s	TRANSISTOR 2SC2758-U18
Q404	8-729-112-65	s	TRANSISTOR 2SA1462
Q405	8-729-119-28	s	TRANSISTOR 2SC2758-U18
RV1	1-228-457-00	s	RES, ADJ, METAL 2K
RV101	1-228-455-00	s	RES, ADJ, METAL 500
RV102	1-228-461-00	s	RES, ADJ, METAL 50K
RV103	1-228-455-00	s	RES, ADJ, METAL 500
RV201	1-228-455-00	s	RES, ADJ, METAL 500
RV202	1-228-461-00	s	RES, ADJ, METAL 50K
RV203	1-228-455-00	s	RES, ADJ, METAL 500
RV301	1-228-455-00	s	RES, ADJ, METAL 500
RV302	1-228-461-00	s	RES, ADJ, METAL 50K
RV303	1-228-455-00	s	RES, ADJ, METAL 500
RV401	1-228-455-00	s	RES, ADJ, METAL 500
RV402	1-228-461-00	s	RES, ADJ, METAL 50K
RV403	1-228-455-00	s	RES, ADJ, METAL 500

Please see pages D-13 to D-15 for the part numbers of capacitors and resistors that are not listed in the parts list.

OTX-11 BOARD

Ref. No. or Q'ty	Part No.	SP	Description
1pc	A-7515-186-A	o	MOUNTED CIRCUIT BOARD, OTX-11
1pc	1-508-944-00	s	PIN
1pc	2-832-003-00	s	BUSH, INSULATING
2pcs	4-026-506-00	o	HEAT SINK (C)
2pcs	7-623-957-41	s	WASHER 6.0, FIBER
C3	1-127-531-11	s	ELECT 20 16V
C4	1-127-531-11	s	ELECT 20 16V
C8	1-131-349-00	s	TANTALUM 2.2uF 10% 35V
C9	1-127-518-11	s	ELECT(SOLID) 100uF 20% 16V
C11	1-127-518-11	s	ELECT(SOLID) 100uF 20% 16V
C104	1-131-367-00	s	TANTALUM 22uF 10% 16V
C108	1-131-367-00	s	TANTALUM 22uF 10% 16V
C204	1-131-367-00	s	TANTALUM 22uF 10% 16V
C208	1-131-367-00	s	TANTALUM 22uF 10% 16V
CN1	1-563-008-11	o	CONTACT, FEMALE, AWG24-30
D1	8-719-121-14	s	DIODE RD8.2ESL2
D2	8-719-121-14	s	DIODE RD8.2ESL2
D3	8-719-118-38	s	DIODE 1SZ46A
D101	A-7615-264-A	s	LED ASSY
D102	8-719-911-19	s	DIODE 1SS119
D103	8-719-800-76	s	DIODE 1SS226
D104	8-719-800-76	s	DIODE 1SS226
D105	8-719-911-19	s	DIODE 1SS119
D106	8-719-800-76	s	DIODE 1SS226
D201	A-7615-264-A	s	LED ASSY
D202	8-719-911-19	s	DIODE 1SS119
D203	8-719-800-76	s	DIODE 1SS226
D204	8-719-800-76	s	DIODE 1SS226
D205	8-719-911-19	s	DIODE 1SS119
D206	8-719-800-76	s	DIODE 1SS226
IC1	8-759-906-53	s	IC TL062CPS
IC101	8-759-983-69	s	IC LM358PS
IC201	8-759-983-69	s	IC LM358PS
Q1	8-729-113-33	s	TRANSISTOR 2SB733-4
Q2	8-729-140-96	s	TRANSISTOR 2SD774-34
Q101	8-729-122-63	s	TRANSISTOR 2SA1226
Q102	8-729-125-20	s	TRANSISTOR 2SC1252
Q201	8-729-122-63	s	TRANSISTOR 2SA1226
Q202	8-729-125-20	s	TRANSISTOR 2SC1252
R106	1-214-822-00	s	METAL 18 1% 1/2W
R107	1-214-828-00	s	METAL 33 1% 1/2W
R109	1-214-711-00	s	METAL 180 1% 1/4W
R110	1-214-681-00	s	METAL 10 1% 1/4W
R206	1-214-822-00	s	METAL 18 1% 1/2W
R207	1-214-828-00	s	METAL 33 1% 1/2W
R209	1-214-711-00	s	METAL 180 1% 1/4W
R210	1-214-681-00	s	METAL 10 1% 1/4W
RV1	1-228-457-00	s	RES, ADJ, METAL 2K
RV101	1-228-454-00	s	RES, ADJ, METAL 200
RV102	1-228-458-00	s	RES, ADJ, METAL 5K
RV201	1-228-454-00	s	RES, ADJ, METAL 200
RV202	1-228-458-00	s	RES, ADJ, METAL 5K
TH101	1-800-194-11	s	THERMISTOR S-68-01
TH201	1-800-194-11	s	THERMISTOR S-68-01

PS-227 BOARD

Ref. No. or Q'ty	Part No.	SP	Description
	A-7584-071-A	o	POWER ASSY A WITH CT-129/130, PS-227 BOARD
1pc	3-168-882-01	o	JOINTO
2PCS	7-683-402-04	s	BOLT, HEXAGON STOK3x5
B1	4-873-829-02	o	HEAT SINK
B2	7-682-952-01	s	SCREW +PSW 3X16
B5	9-983-709-01	s	RUBBER (STB-CR07), RADIATION
B6	9-983-709-01	s	RUBBER (STB-CR07), RADIATION
B7	7-682-949-01	s	SCREW +PSW 3X10
B8	7-682-949-01	s	SCREW +PSW 3X10
B9	9-983-709-01	s	RUBBER (STB-CR07), RADIATION
B10	9-983-709-01	s	RUBBER (STB-CR07), RADIATION
B11	9-983-709-01	s	RUBBER (STB-CR07), RADIATION
B12	9-983-709-01	s	RUBBER (STB-CR07), RADIATION
B14	7-682-952-01	s	SCREW +PSW 3X16
B15	7-682-952-01	s	SCREW +PSW 3X16
B16	7-684-023-04	s	N 3, TYPE 2
B17	7-684-023-04	s	N 3, TYPE 2
B18	7-682-648-09	s	SCREW +PS 3X8
B21	7-685-646-79	s	SCREW +BVTP 3X8 TYPE2 IT-3
B23	7-685-646-79	s	SCREW +BVTP 3X8 TYPE2 IT-3
B24	7-682-650-09	s	SCREW +PS 3X12
B25	7-682-650-09	s	SCREW +PS 3X12
B26	1-543-060-00	s	CORE
B27	1-543-060-00	s	CORE
B28	1-543-060-00	s	CORE
B29	1-543-060-00	s	CORE
B30	1-543-060-00	s	CORE
B31	1-543-060-00	s	CORE
B32	1-543-060-00	s	CORE
B33	1-543-060-00	s	CORE
B35	7-682-648-09	s	SCREW +PS 3X8
2pcs	1-533-190-11	s	CLIP, FUSE
1pc	1-570-258-11	s	SWITCH, THERMAL REED
C101	1-125-643-11	s	ELECT 2200uF 20% 250V
C102	1-125-643-11	s	ELECT 2200uF 20% 250V
C103	1-136-201-11	s	FILM 0.22uF 5% 400V
C104	⚠1-161-740-00	s	CERAMIC 470PF 10% 400V
C105	⚠1-161-740-00	s	CERAMIC 470PF 10% 400V
C106	1-136-626-11	s	FILM 1uF 10% 250V
C107	1-136-626-11	s	FILM 1uF 10% 250V
C108	1-136-626-11	s	FILM 1uF 10% 250V
C109	1-136-626-11	s	FILM 1uF 10% 250V
C110	1-101-821-00	s	CERAMIC 0.0022uF 500V
C111	1-101-821-00	s	CERAMIC 0.0022uF 500V
C201	1-162-318-11	s	CERAMIC 0.001uF 10% 500V
C202	1-162-318-11	s	CERAMIC 0.001uF 10% 500V
C203	1-162-131-11	s	CERAMIC 220PF 10% 2KV
C204	1-162-131-11	s	CERAMIC 220PF 10% 2KV
C205	1-162-131-11	s	CERAMIC 220PF 10% 2KV
C206	1-162-131-11	s	CERAMIC 220PF 10% 2KV
C207	1-162-131-11	s	CERAMIC 220PF 10% 2KV
C208	1-162-131-11	s	CERAMIC 220PF 10% 2KV
C209	1-162-131-11	s	CERAMIC 220PF 10% 2KV
C210	1-162-131-11	s	CERAMIC 220PF 10% 2KV
C212	1-126-912-11	s	ELECT 33uF 0 250V
C213	1-128-128-11	s	ELECT 100uF 0 250V
C214	1-101-821-00	s	CERAMIC 0.0022uF 500V
C215	1-123-875-11	s	ELECT 10uF 20% 50V

Please see pages D-13 to D-15 for the part numbers of capacitors and resistors that are not listed in the parts list.

(PS-227 BOARD)

Ref. No. or Q'ty	Part No.	SP	Description
C216	1-123-875-11	s	ELECT 10uF 20% 50V
C217	1-126-233-11	s	ELECT 22uF 20% 35V
C218	1-130-483-00	s	MYLAR 0.01uF 5% 50V
C219	1-130-483-00	s	MYLAR 0.01uF 5% 50V
C220	1-130-493-00	s	MYLAR 0.068uF 5% 50V
C221	1-130-485-00	s	MYLAR 0.015uF 5% 50V
C222	1-130-485-00	s	MYLAR 0.015uF 5% 50V
C226	1-126-162-22	s	ELECT 3.3uF 20% 50V
C228	1-162-318-11	s	CERAMIC 0.001uF 10% 500V
C229	1-162-318-11	s	CERAMIC 0.001uF 10% 500V
C230	1-162-318-11	s	CERAMIC 0.001uF 10% 500V
C231	1-162-318-11	s	CERAMIC 0.001uF 10% 500V
C232	1-126-913-11	s	ELECT 220uF 0 160V
C233	1-126-913-11	s	ELECT 220uF 0 160V
C234	1-101-821-00	s	CERAMIC 0.0022uF 500V
CN101	1-535-419-00	o	TAB, FASTEN (PCB)
CN102	1-535-419-00	o	TAB, FASTEN (PCB)
CN103	1-535-419-00	o	TAB, FASTEN (PCB)
CN201	1-564-104-00	o	CONNECTOR, 3P, MALE
CN202	1-506-632-11	o	CONNECTOR, 6P MALE
CN203	1-506-631-11	o	CONNECTOR, 4P MALE
CN204	1-506-633-11	o	CONNECTOR, 8P MALE
CN205	1-506-702-11	o	CONNECTOR, ILG 3P,
CN207	1-564-001-11	o	CONNECTOR, 2P, MALE
CT129	1-590-194-11	s	SOCKET, SIL 12P
CT130	1-590-894-11	s	SOCKET, SIL 11P
D101	8-719-500-27	s	DIODE S15VB60
D102	8-719-210-21	s	DIODE 11EQS04
D103	8-719-210-21	s	DIODE 11EQS04
D201	8-719-979-28	s	DIODE ESAD39-06C
D202	8-719-979-29	s	DIODE ESAD39-06N
D203	8-719-979-28	s	DIODE ESAD39-06C
D204	8-719-979-29	s	DIODE ESAD39-06N
D205	8-719-313-16	s	DIODE AU02A
D206	8-719-110-85	s	DIODE RD36ES-B4
D207	8-719-313-14	s	DIODE FML-22S
D208	8-719-123-89	s	DIODE RD91E-B
D209	8-719-110-76	s	DIODE RD33ESB1
D210	8-719-110-39	s	DIODE RD15ESB1
D214	8-719-912-20	s	DIODE 1SS120
D215	8-719-912-20	s	DIODE 1SS120
D216	8-719-027-88	s	DIODE GL5KG8T
D217	8-719-110-85	s	DIODE RD36ES-B4
D218	8-719-110-85	s	DIODE RD36ES-B4
D219	8-719-313-16	s	DIODE AU02A
D220	8-719-313-16	s	DIODE AU02A
D221	8-719-912-20	s	DIODE 1SS120
D222	8-719-912-20	s	DIODE 1SS120
D223	8-719-907-25	s	DIODE ERA84-009
D224	8-719-907-25	s	DIODE ERA84-009
D225	8-719-907-25	s	DIODE ERA84-009
D226	8-719-907-25	s	DIODE ERA84-009
D227	8-719-027-89	s	DIODE GL5PR8T
D228	8-719-912-20	s	DIODE 1SS120
D229	8-719-119-79	s	DIODE RD3.0ESL2
D230	8-719-120-65	s	DIODE RD5.6ESL2
D232	8-719-912-20	s	DIODE 1SS120
D233	8-719-912-20	s	DIODE 1SS120

Please see pages D-13 to D-15 for the part numbers of capacitors and resistors that are not listed in the parts list.

(PS-227 BOARD)

Ref. No. or Q'ty	Part No.	SP	Description
D234	8-719-912-20	s	DIODE 1SS120
F101	⚠1-576-081-11	s	FUSE, GLASS TUBE
F102	⚠1-576-172-11	s	FUSE, MICRO
IC201	8-759-143-02	s	IC UPC7812HF
IC202	8-759-143-02	s	IC UPC7812HF
L101	1-424-058-11	s	LFT
L201	1-421-329-00	s	COIL, CHOKE 10uH
L202	1-424-403-11	s	COIL, CHOKE 13.3MMH
L203	1-421-370-00	s	CHOKE
L204	1-459-140-00	s	COIL, WITH CORE
L205	1-424-135-11	s	FILTER, LINE
PS201	1-532-679-00	s	LINK, IC
Q101	8-729-926-54	s	TRANSISTOR IRFP460
Q102	8-729-926-54	s	TRANSISTOR IRFP460
Q103	8-729-119-76	s	TRANSISTOR 2SA1175-E
Q104	8-729-119-76	s	TRANSISTOR 2SA1175-E
Q201	8-729-178-55	s	TRANSISTOR 2SC2785-E
Q202	8-729-104-66	s	TRANSISTOR 2SC3158
Q203	8-729-104-66	s	TRANSISTOR 2SC3158
Q204	8-729-178-55	s	TRANSISTOR 2SC2785-E
Q205	8-729-178-55	s	TRANSISTOR 2SC2785-E
Q206	8-729-208-04	s	TRANSISTOR 2SK422
Q207	8-729-208-04	s	TRANSISTOR 2SK422
Q208	8-729-119-76	s	TRANSISTOR 2SA1175-E
Q209	8-729-119-76	s	TRANSISTOR 2SA1175-E
Q210	8-729-133-33	s	TRANSISTOR 2SC2333-L
Q212	8-729-140-27	s	TRANSISTOR 2SA1458-K
Q213	8-729-140-41	s	TRANSISTOR 2SC3731-K
Q214	8-729-140-27	s	TRANSISTOR 2SA1458-K
Q215	8-729-140-41	s	TRANSISTOR 2SC3731-K
Q216	8-729-140-41	s	TRANSISTOR 2SC3731-K
Q217	8-729-140-27	s	TRANSISTOR 2SA1458-K
Q218	8-729-140-27	s	TRANSISTOR 2SA1458-K
Q219	8-729-140-41	s	TRANSISTOR 2SC3731-K
Q220	8-729-140-41	s	TRANSISTOR 2SC3731-K
Q221	8-729-178-55	s	TRANSISTOR 2SC2785-E
Q222	8-729-178-55	s	TRANSISTOR 2SC2785-E
Q223	8-729-178-55	s	TRANSISTOR 2SC2785-E
Q224	8-729-178-55	s	TRANSISTOR 2SC2785-E
Q225	8-729-178-55	s	TRANSISTOR 2SC2785-E
Q226	8-729-178-55	s	TRANSISTOR 2SC2785-E
R101	1-214-921-00	s	CARBON 220K 5% 1/2W
R102	1-214-921-00	s	CARBON 220K 5% 1/2W
R103	1-205-625-00	s	WIREWOUND 220 5% 5W
R104	1-205-625-00	s	WIREWOUND 220 5% 5W
R105	1-247-696-11	s	CARBON 47 5% 1/4W
R106	1-247-696-11	s	CARBON 47 5% 1/4W
R107	1-249-421-11	s	CARBON 2.2K 5% 1/4W
R108	1-249-421-11	s	CARBON 2.2K 5% 1/4W
R201	1-205-625-00	s	WIREWOUND 220 5% 5W
R202	1-205-625-00	s	WIREWOUND 220 5% 5W
R203	1-205-625-00	s	WIREWOUND 220 5% 5W
R204	1-205-625-00	s	WIREWOUND 220 5% 5W
R205	1-249-433-11	s	CARBON 22K 5% 1/4W
R206	1-249-423-11	s	CARBON 3.3K 5% 1/4W
R207	1-247-893-11	s	CARBON 390K 5% 1/4W

(PS-227 BOARD)

Ref. No. or Q'ty	Part No.	SP	Description
R208	1-247-893-11	s	CARBON 390K 5% 1/4W
R209	1-215-897-11	s	METAL 6.8K 5% 2W
R210	1-215-897-11	s	METAL 6.8K 5% 2W
R212	1-247-887-00	s	CARBON 220K 5% 1/4W
R213	1-247-887-00	s	CARBON 220K 5% 1/4W
R214	1-247-887-00	s	CARBON 220K 5% 1/4W
R215	1-249-434-11	s	CARBON 27K 5% 1/4W
R216	1-247-881-00	s	CARBON 120K 5% 1/4W
R217	1-249-440-11	s	CARBON 82K 5% 1/4W
R218	1-249-440-11	s	CARBON 82K 5% 1/4W
R219	1-249-436-11	s	CARBON 39K 5% 1/4W
R220	1-249-433-11	s	CARBON 22K 5% 1/4W
R221	1-215-903-11	s	METAL 68K 5% 2W
R222	1-205-677-00	s	WIREWOUND 1K 5% 5W
R223	1-205-677-00	s	WIREWOUND 1K 5% 5W
R226	1-249-419-11	s	CARBON 1.5K 5% 1/4W
R227	1-249-437-11	s	CARBON 47K 5% 1/4W
R228	1-249-429-11	s	CARBON 10K 5% 1/4W
R229	1-249-437-11	s	CARBON 47K 5% 1/4W
R230	1-216-377-11	s	METAL 4.7 5% 2W
R231	1-247-747-11	s	CARBON 470 5% 1/2W
R232	1-247-747-11	s	CARBON 470 5% 1/2W
R233	1-215-463-00	s	METAL 56K 1% 1/6W
R234	1-215-437-00	s	METAL 4.7K 1% 1/6W
R235	1-249-426-11	s	CARBON 5.6K 5% 1/4W
R236	1-215-469-00	s	METAL 100K 1% 1/6W
R237	1-215-469-00	s	METAL 100K 1% 1/6W
R238	1-215-438-00	s	METAL 5.1K 1% 1/6W
R239	1-249-425-11	s	CARBON 4.7K 5% 1/4W
R240	1-249-419-11	s	CARBON 1.5K 5% 1/4W
R241	1-249-437-11	s	CARBON 47K 5% 1/4W
R242	1-249-429-11	s	CARBON 10K 5% 1/4W
R243	1-249-419-11	s	CARBON 1.5K 5% 1/4W
R247	1-247-881-00	s	CARBON 120K 5% 1/4W
R248	1-249-437-11	s	CARBON 47K 5% 1/4W
R249	1-247-881-00	s	CARBON 120K 5% 1/4W
R250	1-249-437-11	s	CARBON 47K 5% 1/4W
R251	1-249-437-11	s	CARBON 47K 5% 1/4W
R252	1-247-742-11	s	CARBON 180 5% 1/2W
R253	1-249-437-11	s	CARBON 47K 5% 1/4W
R254	1-249-437-11	s	CARBON 47K 5% 1/4W
R255	1-249-429-11	s	CARBON 10K 5% 1/4W
R256	1-249-437-11	s	CARBON 47K 5% 1/4W
R257	1-249-421-11	s	CARBON 2.2K 5% 1/4W
R258	1-249-421-11	s	CARBON 2.2K 5% 1/4W
R259	1-249-437-11	s	CARBON 47K 5% 1/4W
R260	1-247-889-00	s	CARBON 270K 5% 1/4W
R261	1-247-881-00	s	CARBON 120K 5% 1/4W
R262	1-249-437-11	s	CARBON 47K 5% 1/4W
R263	1-249-437-11	s	CARBON 47K 5% 1/4W
R264	1-249-429-11	s	CARBON 10K 5% 1/4W
R265	1-249-429-11	s	CARBON 10K 5% 1/4W
R266	1-249-437-11	s	CARBON 47K 5% 1/4W
R267	1-249-437-11	s	CARBON 47K 5% 1/4W
R268	1-249-429-11	s	CARBON 10K 5% 1/4W
R269	1-249-437-11	s	CARBON 47K 5% 1/4W
R270	1-249-429-11	s	CARBON 10K 5% 1/4W
R271	1-249-437-11	s	CARBON 47K 5% 1/4W
R272	1-249-429-11	s	CARBON 10K 5% 1/4W

Please see pages D-13 to D-15 for the part numbers of capacitors and resistors that are not listed in the parts list.

(PS-227 BOARD)

Ref. No. or Q'ty	Part No.	SP	Description
R273	1-249-437-11	s	CARBON 47K 5% 1/4W
R274	1-249-429-11	s	CARBON 10K 5% 1/4W
R275	1-249-437-11	s	CARBON 47K 5% 1/4W
R276	1-249-429-11	s	CARBON 10K 5% 1/4W
R277	1-249-429-11	s	CARBON 10K 5% 1/4W
S201	1-570-857-11	s	SWITCH, SLIDE
S202	1-570-832-11	s	SWITCH, SLIDE
T101	⚠1-450-192-11	s	TRANSFORMER, CONVERTER
T102	1-421-819-11	s	TRANSFORMER, CURRENT
T103	⚠1-437-188-11	s	TRANSFORMER, DRIVE
T104	⚠1-437-188-11	s	TRANSFORMER, DRIVE
T201	1-421-624-00	s	TRANSFORMER, CURRENT
VZ101	1-576-046-11	s	ARRESTER, GUS TUBE

PS-228 BOARD

Ref. No. or Q'ty	Part No.	SP	Description
	A-7584-072-A	o	POWER ASSY B WITH PS-228 BOARD
2pcs	1-533-189-11	o	HOLDER, FUSE
2pcs	3-621-124-00	o	SPACER
1pc	7-682-247-04	s	SCREW +K 3X6
1pc	7-682-250-04	s	SCREW +K 3X12
2pcs	7-682-947-01	s	SCREW +PSW 3X6
6pcs	7-682-948-01	s	SCREW +PSW 3X8
4pcs	7-682-949-01	s	SCREW +PSW 3X10
C101	⚠1-136-472-11	s	FILM 0.1uF 20% 250V
C102	⚠1-136-297-11	s	FILM 0.033uF 20% 250V
C103	⚠1-161-742-00	s	CERAMIC 0.0022uF 20% 400V
C104	⚠1-161-742-00	s	CERAMIC 0.0022uF 20% 400V
C105	1-125-495-11	s	ELECT 220uF 20% 400V
C106	1-136-207-11	s	FILM 0.047uF 5% 630V
C108	1-136-744-11	s	FILM 0.22uF 5% 50V
C109	1-102-228-00	s	CERAMIC 470PF 10% 500V
C110	1-102-228-00	s	CERAMIC 470PF 10% 500V
C111	⚠1-161-742-00	s	CERAMIC 0.0022uF 20% 400V
C112	⚠1-161-742-00	s	CERAMIC 0.0022uF 20% 400V
C113	⚠1-161-742-00	s	CERAMIC 0.0022uF 20% 400V
C114	⚠1-161-742-00	s	CERAMIC 0.0022uF 20% 400V
C202	1-124-520-11	s	ELECT 3300uF 20% 10V
C203	1-124-520-11	s	ELECT 3300uF 20% 10V
C204	1-124-962-11	s	ELECT 2200uF 20% 25V
C205	1-124-962-11	s	ELECT 2200uF 20% 25V
C206	1-124-580-11	s	ELECT 330uF 20% 25V
C207	1-124-580-11	s	ELECT 330uF 20% 25V
C208	1-106-351-00	s	MYLAR 0.0022uF 5% 100V
C209	1-106-371-00	s	MYLAR 0.015uF 10% 200V
C210	1-130-483-00	s	MYLAR 0.01uF 5% 50V
C211	1-130-477-00	s	MYLAR 0.0033uF 5% 50V
C212	1-126-142-11	s	ELECT 100uF 20% 35V
C213	1-126-142-11	s	ELECT 100uF 20% 35V
C214	1-130-477-00	s	MYLAR 0.0033uF 5% 50V
C215	1-124-510-11	s	ELECT 220uF 20% 25V
C216	1-124-510-11	s	ELECT 220uF 20% 25V
C219	1-124-927-11	s	ELECT 4.7uF 20% 100V
C221	1-130-495-00	s	MYLAR 0.1uF 5% 50V
C222	1-130-491-00	s	MYLAR 0.047uF 5% 50V
C224	1-130-491-00	s	MYLAR 0.047uF 5% 50V
C225	1-130-471-00	s	MYLAR 0.001uF 5% 50V
C226	1-130-475-00	s	MYLAR 0.0022uF 5% 50V
C229	1-130-467-00	s	MYLAR 470pF 5% 50V
C230	1-130-471-00	s	MYLAR 0.001uF 5% 50V
C231	1-130-471-00	s	MYLAR 0.001uF 5% 50V
CN101	⚠1-564-104-00	o	CONNECTOR, 3P, MALE
CN201	1-506-640-11	o	CONNECTOR, 22P, MALE
CN202	1-506-633-11	o	CONNECTOR, 8P MALE
D101	8-719-300-63	s	DIODE LB-156
D102	8-719-970-87	s	DIODE ERA38-06
D103	8-719-911-19	s	DIODE 1SS119
D104	8-719-970-87	s	DIODE ERA38-06
D105	8-719-109-85	s	DIODE RD5.1ES-B2
D106	8-719-970-87	s	DIODE ERA38-06
D107	8-719-108-30	s	THYRISTOR 3P4MH
D201	8-719-970-87	s	DIODE ERA38-06
D202	8-719-920-67	s	DIODE ERC91-02
D203	8-719-970-87	s	DIODE ERA38-06

(PS-228 BOARD)

Ref. No. or Q'ty	Part No.	SP	Description
D204	8-719-970-39	s	DIODE ESAC92M-02
D205	8-719-903-16	s	DIODE ESAC85-009
D206	8-719-903-06	s	DIODE ERC84-009
D207	8-719-970-39	s	DIODE ESAC92M-02
D208	8-719-920-67	s	DIODE ERC91-02
D209	8-719-970-87	s	DIODE ERA38-06
D210	8-719-970-87	s	DIODE ERA38-06
D211	8-719-110-84	s	DIODE RD36ESB3
D212	8-719-913-44	s	DIODE ERA82-004
D213	8-719-911-19	s	DIODE 1SS119
D214	8-719-911-19	s	DIODE 1SS119
D215	8-719-110-84	s	DIODE RD36ESB3
D216	8-719-110-78	s	DIODE RD33ESB2
D217	8-719-913-44	s	DIODE ERA82-004
F101	⚠1-532-825-11	s	FUSE, GLASS TUBE
IC101	1-807-814-11	s	IC B-5272
IC201	8-759-602-66	s	IC M5230L-A
IC202	8-759-602-66	s	IC M5230L-A
IC203	8-759-937-59	s	IC MB3759
IC204	8-759-908-15	s	IC TL431CLP
L101	⚠1-424-385-11	s	LFT (SV16VF-10080)
L201	1-459-155-00	s	COIL, WITH CORE 45UH
L202	1-459-155-00	s	COIL, WITH CORE 45UH
PS201	1-532-605-00	s	LINK, IC
Q101	8-729-819-83	s	TRANSISTOR 2SC3460-M
Q102	8-729-140-96	s	TRANSISTOR 2SD774-34
Q201	8-729-905-88	s	TRANSISTOR 2SA1599
Q202	8-729-905-89	s	TRANSISTOR 2SC4149
Q203	8-729-905-88	s	TRANSISTOR 2SA1599
Q204	8-729-905-89	s	TRANSISTOR 2SC4149
Q205	8-729-119-76	s	TRANSISTOR 2SA1175-E
Q206	8-729-119-78	s	TRANSISTOR 2SC2785-HF
Q207	8-729-119-78	s	TRANSISTOR 2SC2785-HF
R101	⚠1-217-784-11	s	FUSIBLE 10 5% 5W
R102	1-215-902-11	s	METAL OXIDE 47K 5% 2W
R103	1-249-417-11	s	CARBON 1K 5% 1/4W
R104	1-247-694-11	s	CARBON 33 5% 1/4W
R105	1-247-704-11	s	CARBON 220 5% 1/4W
R106	1-216-427-00	s	METAL 120 5% 1W
R107	1-247-694-11	s	CARBON 33 5% 1/4W
R108	1-215-861-00	s	METAL 47 5% 1W
R109	1-249-417-11	s	CARBON 1K 5% 1/4W
R201	1-247-756-11	s	CARBON 2.2K 5% 1/2W
R202	1-247-756-11	s	CARBON 2.2K 5% 1/2W
R203	1-249-409-11	s	CARBON 220 5% 1/4W
R204	1-249-409-11	s	CARBON 220 5% 1/4W
R205	1-249-409-11	s	CARBON 220 5% 1/4W
R206	1-249-409-11	s	CARBON 220 5% 1/4W
R207	1-247-696-11	s	CARBON 47 5% 1/4W
R208	1-216-450-00	s	METAL 82 5% 2W
R209	1-247-764-11	s	CARBON 10K 5% 1/2W
R210	1-215-499-00	s	METAL 15K 1% 1/4W
R211	1-215-499-00	s	METAL 15K 1% 1/4W
R212	1-247-752-11	s	CARBON 1K 5% 1/2W
R213	1-247-752-11	s	CARBON 1K 5% 1/2W
R214	1-249-435-11	s	CARBON 33K 5% 1/4W
R215	1-249-423-11	s	CARBON 3.3K 5% 1/4W

Please see pages D-13 to D-15 for the part numbers of capacitors and resistors that are not listed in the parts list.

(PS-228 BOARD)

Ref. No. or Q'ty	Part No.	SP	Description
R217	1-215-499-00	s	METAL 15K 1% 1/4W
R218	1-215-499-00	s	METAL 15K 1% 1/4W
R219	1-247-739-11	s	CARBON 100 5% 1/2W
R220	1-247-739-11	s	CARBON 100 5% 1/2W
R221	1-249-430-11	s	CARBON 12K 5% 1/4W
R222	1-249-423-11	s	CARBON 3.3K 5% 1/4W
R224	1-249-439-11	s	CARBON 68K 5% 1/4W
R225	1-249-439-11	s	CARBON 68K 5% 1/4W
R226	1-249-441-11	s	CARBON 100K 5% 1/4W
R227	1-249-439-11	s	CARBON 68K 5% 1/4W
R228	1-249-409-11	s	CARBON 220 5% 1/4W
R229	1-249-418-11	s	CARBON 1.2K 5% 1/4W
R230	1-249-432-11	s	CARBON 18K 5% 1/4W
R231	1-247-903-00	s	CARBON 1M 5% 1/4W
R232	1-249-437-11	s	CARBON 47K 5% 1/4W
R233	1-247-887-00	s	CARBON 220K 5% 1/4W
R234	1-249-433-11	s	CARBON 22K 5% 1/4W
R235	1-249-423-11	s	CARBON 3.3K 5% 1/4W
R236	1-249-419-11	s	CARBON 1.5K 5% 1/4W
R237	1-249-423-11	s	CARBON 3.3K 5% 1/4W
R238	1-249-413-11	s	CARBON 470 5% 1/4W
R239	1-249-427-11	s	CARBON 6.8K 5% 1/4W
R240	1-249-419-11	s	CARBON 1.5K 5% 1/4W
R241	1-249-428-11	s	CARBON 8.2K 5% 1/4W
R242	1-249-421-11	s	CARBON 2.2K 5% 1/4W
R243	1-249-413-11	s	CARBON 470 5% 1/4W
R244	1-249-417-11	s	CARBON 1K 5% 1/4W
R245	1-249-426-11	s	CARBON 5.6K 5% 1/4W
R246	1-249-423-11	s	CARBON 3.3K 5% 1/4W
R247	1-249-436-11	s	CARBON 39K 5% 1/4W
RV201	1-228-456-00	s	RES, ADJ, METAL 1K
RV202	1-228-458-00	s	RES, ADJ, METAL 5K
RV203	1-228-458-00	s	RES, ADJ, METAL 5K
T101	⚠1-450-193-11	s	TRANSFORMER, CONVERTER
T102	⚠1-437-169-11	s	TRANSFORMER, DRIVE
T103	⚠1-421-715-21	s	TRANSFORMER, CURRENT
T104	⚠1-448-393-11	s	TRANSFORMER, CONVERTER

VA-99 BOARD

Ref. No. or Q'ty	Part No.	SP	Description
1pc	A-7515-184-A	o	MOUNTED CIRCUIT BOARD, VA-99
1pc	X-3166-228-1	o	CASE ASSY, SHIELD, VA
10pcs	3-621-124-00	o	SPACER
4pcs	7-626-320-11	s	PIN, SPRING 3X8
2pcs	7-685-870-04	s	SCREW +BVTT 3X5 (S)
C3	1-161-485-00	s	CERAMIC 0.1uF 50V
C4	1-161-485-00	s	CERAMIC 0.1uF 50V
C5	1-161-485-00	s	CERAMIC 0.1uF 50V
C6	1-131-349-00	s	TANTALUM 2.2uF 10% 35V
C7	1-161-485-00	s	CERAMIC 0.1uF 50V
C8	1-127-499-00	s	ELECT(SOLID) 22uF 20% 16V
C9	1-127-499-00	s	ELECT(SOLID) 22uF 20% 16V
C13	1-161-485-00	s	CERAMIC 0.1uF 50V
C14	1-161-485-00	s	CERAMIC 0.1uF 50V
C15	1-161-485-00	s	CERAMIC 0.1uF 50V
C16	1-131-349-00	s	TANTALUM 2.2uF 10% 35V
C17	1-161-485-00	s	CERAMIC 0.1uF 50V
C18	1-127-499-00	s	ELECT(SOLID) 22uF 20% 16V
C19	1-127-499-00	s	ELECT(SOLID) 22uF 20% 16V
C101	1-124-589-11	s	ELECT 47uF 20% 10V
C102	1-124-589-11	s	ELECT 47uF 20% 10V
C104	1-131-365-00	s	TANTALUM 10uF 10% 16V
C105	1-131-365-00	s	TANTALUM 10uF 10% 16V
C108	1-131-377-00	s	TANTALUM 10uF 20% 10V
C113	1-131-347-00	s	TANTALUM 1uF 10% 35V
C114	1-131-347-00	s	TANTALUM 1uF 10% 35V
C115	1-131-365-00	s	TANTALUM 10uF 10% 16V
C116	1-131-365-00	s	TANTALUM 10uF 10% 16V
C117	1-131-367-00	s	TANTALUM 22uF 10% 16V
C119	1-131-365-00	s	TANTALUM 10uF 10% 16V
C120	1-131-365-00	s	TANTALUM 10uF 10% 16V
C123	1-124-242-00	s	ELECT 33uF 20% 25V
C125	1-124-589-11	s	ELECT 47uF 20% 10V
C128	1-124-242-00	s	ELECT 33uF 20% 25V
C129	1-124-242-00	s	ELECT 33uF 20% 25V
C130	1-131-365-00	s	TANTALUM 10uF 10% 16V
C131	1-131-365-00	s	TANTALUM 10uF 10% 16V
C133	1-124-589-11	s	ELECT 47uF 20% 10V
C134	1-124-589-11	s	ELECT 47uF 20% 10V
C140	1-163-088-00	s	CERAMIC CHIP 5PF 0.25PF 50V
C142	1-163-088-00	s	CERAMIC CHIP 5PF 0.25PF 50V
C148	1-163-088-00	s	CERAMIC CHIP 5PF 0.25PF 50V
C150	1-102-963-00	s	CERAMIC 33PF 5% 50V
C201	1-124-589-11	s	ELECT 47uF 20% 10V
C202	1-124-589-11	s	ELECT 47uF 20% 10V
C204	1-131-365-00	s	TANTALUM 10uF 10% 16V
C205	1-131-365-00	s	TANTALUM 10uF 10% 16V
C208	1-131-377-00	s	TANTALUM 10uF 20% 10V
C213	1-131-347-00	s	TANTALUM 1uF 10% 35V
C214	1-131-347-00	s	TANTALUM 1uF 10% 35V
C215	1-131-365-00	s	TANTALUM 10uF 10% 16V
C216	1-131-365-00	s	TANTALUM 10uF 10% 16V
C217	1-131-367-00	s	TANTALUM 22uF 10% 16V
C219	1-131-365-00	s	TANTALUM 10uF 10% 16V
C220	1-131-365-00	s	TANTALUM 10uF 10% 16V
C223	1-124-242-00	s	ELECT 33uF 20% 25V
C225	1-124-589-11	s	ELECT 47uF 20% 10V
C228	1-124-242-00	s	ELECT 33uF 20% 25V
C229	1-124-242-00	s	ELECT 33uF 20% 25V

Please see pages D-13 to D-15 for the part numbers of capacitors and resistors that are not listed in the parts list.

(VA-99 BOARD)

Ref. No. or Q'ty	Part No.	SP	Description
C230	1-131-365-00	s	TANTALUM 10uF 10% 16V
C231	1-131-365-00	s	TANTALUM 10uF 10% 16V
C233	1-124-589-11	s	ELECT 47uF 20% 10V
C234	1-124-589-11	s	ELECT 47uF 20% 10V
C240	1-163-088-00	s	CERAMIC CHIP 5PF 0.25PF 50V
C242	1-163-088-00	s	CERAMIC CHIP 5PF 0.25PF 50V
C248	1-163-088-00	s	CERAMIC CHIP 5PF +/-0.25PF 50V
C250	1-102-963-00	s	CERAMIC 33PF 5% 50V
C301	1-124-589-11	s	ELECT 47uF 20% 10V
C302	1-124-589-11	s	ELECT 47uF 20% 10V
C304	1-131-365-00	s	TANTALUM 10uF 10% 16V
C305	1-131-365-00	s	TANTALUM 10uF 10% 16V
C308	1-131-377-00	s	TANTALUM 10uF 20% 10V
C313	1-131-347-00	s	TANTALUM 1uF 10% 35V
C314	1-131-347-00	s	TANTALUM 1uF 10% 35V
C315	1-131-365-00	s	TANTALUM 10uF 10% 16V
C316	1-131-365-00	s	TANTALUM 10uF 10% 16V
C317	1-131-367-00	s	TANTALUM 22uF 10% 16V
C319	1-131-365-00	s	TANTALUM 10uF 10% 16V
C320	1-131-365-00	s	TANTALUM 10uF 10% 16V
C323	1-124-242-00	s	ELECT 33uF 20% 25V
C325	1-124-589-11	s	ELECT 47uF 20% 10V
C328	1-124-242-00	s	ELECT 33uF 20% 25V
C329	1-124-242-00	s	ELECT 33uF 20% 25V
C330	1-131-365-00	s	TANTALUM 10uF 10% 16V
C331	1-131-365-00	s	TANTALUM 10uF 10% 16V
C333	1-124-589-11	s	ELECT 47uF 20% 10V
C334	1-124-589-11	s	ELECT 47uF 20% 10V
C340	1-163-088-00	s	CERAMIC CHIP 5PF 0.25PF 50V
C342	1-163-088-00	s	CERAMIC CHIP 5PF 0.25PF 50V
C348	1-163-088-00	s	CERAMIC CHIP 5PF +/-0.25PF 50V
C350	1-102-963-00	s	CERAMIC 33PF 5% 50V
C406	1-131-360-00	s	TANTALUM 15uF 10% 20V
C408	1-131-365-00	s	TANTALUM 10uF 10% 16V
C409	1-131-365-00	s	TANTALUM 10uF 10% 16V
C410	1-131-365-00	s	TANTALUM 10uF 10% 16V
C411	1-131-365-00	s	TANTALUM 10uF 10% 16V
C414	1-163-084-00	s	CERAMIC CHIP 1.5PF 0.25PF 50V
C415	1-131-381-00	s	TANTALUM 47uF 10% 6.3V
C416	1-131-381-00	s	TANTALUM 47uF 10% 6.3V
C506	1-131-360-00	s	TANTALUM 15uF 10% 20V
C508	1-131-365-00	s	TANTALUM 10uF 10% 16V
C509	1-131-365-00	s	TANTALUM 10uF 10% 16V
C510	1-131-365-00	s	TANTALUM 10uF 10% 16V
C511	1-131-365-00	s	TANTALUM 10uF 10% 16V
C514	1-163-084-00	s	CERAMIC CHIP 1.5PF 0.25PF 50V
C515	1-131-381-00	s	TANTALUM 47uF 10% 6.3V
C516	1-131-381-00	s	TANTALUM 47uF 10% 6.3V
C520	1-131-365-00	s	TANTALUM 10uF 10% 6.3V
CN1	1-580-098-11	o	CONNECTOR, 50P
D1	8-719-121-14	s	DIODE RD8.2ESL2
D2	8-719-121-14	s	DIODE RD8.2ESL2
D3	8-719-118-38	s	DIODE 1SZ46A
D4	8-719-121-14	s	DIODE RD8.2ESL2
D5	8-719-121-14	s	DIODE RD8.2ESL2
D6	8-719-118-38	s	DIODE 1SZ46A
D101	8-719-800-76	s	DIODE 1SS226
D102	8-719-800-76	s	DIODE 1SS226

(VA-99 BOARD)

Ref. No. or Q'ty	Part No.	SP	Description
D103	8-719-800-76	s	DIODE 1SS226
D104	8-719-119-70	s	DIODE RD2.7ESL2
D105	8-719-119-98	s	DIODE RD3.6ESL2
D106	8-719-801-26	s	DIODE TLR223
D201	8-719-800-76	s	DIODE 1SS226
D202	8-719-800-76	s	DIODE 1SS226
D203	8-719-800-76	s	DIODE 1SS226
D204	8-719-119-70	s	DIODE RD2.7ESL2
D205	8-719-119-98	s	DIODE RD3.6ESL2
D206	8-719-801-26	s	DIODE TLR223
D301	8-719-800-76	s	DIODE 1SS226
D302	8-719-800-76	s	DIODE 1SS226
D303	8-719-800-76	s	DIODE 1SS226
D304	8-719-119-70	s	DIODE RD2.7ESL2
D305	8-719-119-98	s	DIODE RD3.6ESL2
D306	8-719-801-26	s	DIODE TLR223
D401	8-719-800-76	s	DIODE 1SS226
D402	8-719-801-26	s	DIODE TLR223
D501	8-719-800-76	s	DIODE 1SS226
D502	8-719-801-26	s	DIODE TLR223
IC1	8-759-906-53	s	IC TL062CPS
IC2	8-759-906-53	s	IC TL062CPS
IC101	8-759-105-49	s	IC UPC319G2
IC102	8-759-906-53	s	IC TL062CPS
IC103	8-759-906-53	s	IC TL062CPS
IC104	8-759-079-05	s	IC MC79L05ACP
IC105	1-808-668-11	s	IC HDVA-1
IC106	8-759-906-53	s	IC TL062CPS
IC107	8-759-009-46	s	IC MC14528BF
IC201	8-759-105-49	s	IC UPC319G2
IC202	8-759-906-53	s	IC TL062CPS
IC203	8-759-906-53	s	IC TL062CPS
IC204	8-759-079-05	s	IC MC79L05ACP
IC205	1-808-668-11	s	IC HDVA-1
IC206	8-759-906-53	s	IC TL062CPS
IC207	8-759-009-46	s	IC MC14528BF
IC301	8-759-105-49	s	IC UPC319G2
IC302	8-759-906-53	s	IC TL062CPS
IC303	8-759-906-53	s	IC TL062CPS
IC304	8-759-079-05	s	IC MC79L05ACP
IC305	1-808-668-11	s	IC HDVA-1
IC306	8-759-906-53	s	IC TL062CPS
IC307	8-759-009-46	s	IC MC14528BF
IC401	8-759-980-04	s	IC LM311PS
IC402	8-759-906-53	s	IC TL062CPS
IC403	8-741-122-90	s	IC BX1229
IC501	8-759-980-04	s	IC LM311PS
IC502	8-759-906-53	s	IC TL062CPS
IC503	8-741-122-90	s	IC BX1229
L1	1-421-957-11	s	COIL, CHOKE 30UH
L2	1-421-957-11	s	COIL, CHOKE 30UH
L3	1-421-957-11	s	COIL, CHOKE 30UH
L4	1-421-957-11	s	COIL, CHOKE 30UH
PH101	1-807-154-11	s	ELEMENT, VAR, RES MCD-7417
PH102	1-807-154-11	s	ELEMENT, VAR, RES MCD-7417
PH201	1-807-154-11	s	ELEMENT, VAR, RES MCD-7417
PH202	1-807-154-11	s	ELEMENT, VAR, RES MCD-7417
PH301	1-807-154-11	s	ELEMENT, VAR, RES MCD-7417

Please see pages D-13 to D-15 for the part numbers of capacitors and resistors that are not listed in the parts list.

(VA-99 BOARD)

Ref. No. or Q'ty	Part No.	SP	Description
PH302	1-807-154-11	s	ELEMENT, VAR, RES MCD-7417
Q1	8-729-113-33	s	TRANSISTOR 2SB733-4
Q2	8-729-177-33	s	TRANSISTOR 2SD773-4
Q3	8-729-113-33	s	TRANSISTOR 2SB733-4
Q4	8-729-177-33	s	TRANSISTOR 2SD773-4
Q101	8-729-112-65	s	TRANSISTOR 2SA1462
Q102	8-729-140-47	s	TRANSISTOR 2SC3735-L-B35
Q103	8-729-301-12	s	TRANSISTOR 2SC2733
Q104	8-729-216-22	s	TRANSISTOR 2SA1162
Q105	8-729-119-28	s	TRANSISTOR 2SC2758-U18
Q106	8-729-119-28	s	TRANSISTOR 2SC2758-U18
Q107	8-729-112-65	s	TRANSISTOR 2SA1462
Q108	8-729-112-65	s	TRANSISTOR 2SA1462
Q109	8-729-140-47	s	TRANSISTOR 2SC3735-L-B35
Q110	8-729-112-65	s	TRANSISTOR 2SA1462
Q111	8-729-140-47	s	TRANSISTOR 2SC3735-L-B35
Q112	8-729-112-65	s	TRANSISTOR 2SA1462
Q113	8-769-401-67	s	TRANSISTOR 3SK163-1
Q114	8-729-200-86	s	TRANSISTOR 2SC2714-0
Q115	8-769-401-67	s	TRANSISTOR 3SK163-1
Q116	8-729-200-86	s	TRANSISTOR 2SC2714-0
Q117	8-729-200-86	s	TRANSISTOR 2SC2714-0
Q118	8-729-100-66	s	TRANSISTOR 2SC1623
Q119	8-729-100-66	s	TRANSISTOR 2SC1623
Q201	8-729-112-65	s	TRANSISTOR 2SA1462
Q202	8-729-140-47	s	TRANSISTOR 2SC3735-L-B35
Q203	8-729-301-12	s	TRANSISTOR 2SC2733
Q204	8-729-216-22	s	TRANSISTOR 2SA1162
Q205	8-729-119-28	s	TRANSISTOR 2SC2758-U18
Q206	8-729-119-28	s	TRANSISTOR 2SC2758-U18
Q207	8-729-112-65	s	TRANSISTOR 2SA1462
Q208	8-729-112-65	s	TRANSISTOR 2SA1462
Q209	8-729-140-47	s	TRANSISTOR 2SC3735-L-B35
Q210	8-729-112-65	s	TRANSISTOR 2SA1462
Q211	8-729-140-47	s	TRANSISTOR 2SC3735-L-B35
Q212	8-729-112-65	s	TRANSISTOR 2SA1462
Q213	8-769-401-67	s	TRANSISTOR 3SK163-1
Q214	8-729-200-86	s	TRANSISTOR 2SC2714-0
Q215	8-769-401-67	s	TRANSISTOR 3SK163-1
Q216	8-729-200-86	s	TRANSISTOR 2SC2714-0
Q217	8-729-200-86	s	TRANSISTOR 2SC2714-0
Q218	8-729-100-66	s	TRANSISTOR 2SC1623
Q219	8-729-100-66	s	TRANSISTOR 2SC1623
Q301	8-729-112-65	s	TRANSISTOR 2SA1462
Q302	8-729-140-47	s	TRANSISTOR 2SC3735-L-B35
Q303	8-729-301-12	s	TRANSISTOR 2SC2733
Q304	8-729-216-22	s	TRANSISTOR 2SA1162
Q305	8-729-119-28	s	TRANSISTOR 2SC2758-U18
Q306	8-729-119-28	s	TRANSISTOR 2SC2758-U18
Q307	8-729-112-65	s	TRANSISTOR 2SA1462
Q308	8-729-112-65	s	TRANSISTOR 2SA1462
Q309	8-729-140-47	s	TRANSISTOR 2SC3735-L-B35
Q310	8-729-112-65	s	TRANSISTOR 2SA1462
Q311	8-729-140-47	s	TRANSISTOR 2SC3735-L-B35
Q312	8-729-112-65	s	TRANSISTOR 2SA1462
Q313	8-769-401-67	s	TRANSISTOR 3SK163-1
Q314	8-729-200-86	s	TRANSISTOR 2SC2714-0
Q315	8-769-401-67	s	TRANSISTOR 3SK163-1

Please see pages D-13 to D-15 for the part numbers of capacitors and resistors that are not listed in the parts list.

(VA-99 BOARD)

Ref. No. or Q'ty	Part No.	SP	Description
Q316	8-729-200-86	s	TRANSISTOR 2SC2714-0
Q317	8-729-200-86	s	TRANSISTOR 2SC2714-0
Q318	8-729-100-66	s	TRANSISTOR 2SC1623
Q319	8-729-100-66	s	TRANSISTOR 2SC1623
Q401	8-729-112-65	s	TRANSISTOR 2SA1462
Q402	8-729-122-63	s	TRANSISTOR 2SA1226
Q403	8-729-119-28	s	TRANSISTOR 2SC2758-U18
Q404	8-729-100-66	s	TRANSISTOR 2SC1623
Q501	8-729-112-65	s	TRANSISTOR 2SA1462
Q502	8-729-122-63	s	TRANSISTOR 2SA1226
Q503	8-729-119-28	s	TRANSISTOR 2SC2758-U18
Q504	8-729-100-66	s	TRANSISTOR 2SC1623
R126	1-216-309-00	s	METAL CHIP 5.6 5% 1/10W
R127	1-216-309-00	s	METAL CHIP 5.6 5% 1/10W
R135	1-216-121-00	s	METAL CHIP 1M 5% 1/10W
R139	1-216-121-00	s	METAL CHIP 1M 5% 1/10W
R140	1-216-109-00	s	METAL CHIP 330K 5% 1/10W
R156	1-214-530-00	s	METAL 75 1% 1/8W
R177	1-215-425-00	s	METAL 1.5K 1% 1/6W
R226	1-216-309-00	s	METAL CHIP 5.6 5% 1/10W
R227	1-216-309-00	s	METAL CHIP 5.6 5% 1/10W
R235	1-216-121-00	s	METAL CHIP 1M 5% 1/10W
R239	1-216-121-00	s	METAL CHIP 1M 5% 1/10W
R240	1-216-109-00	s	METAL CHIP 330K 5% 1/10W
R256	1-214-530-00	s	METAL 75 1% 1/8W
R277	1-215-425-00	s	METAL 1.5K 1% 1/6W
R326	1-216-309-00	s	METAL CHIP 5.6 5% 1/10W
R327	1-216-309-00	s	METAL CHIP 5.6 5% 1/10W
R335	1-216-121-00	s	METAL CHIP 1M 5% 1/10W
R339	1-216-121-00	s	METAL CHIP 1M 5% 1/10W
R340	1-216-109-00	s	METAL CHIP 330K 5% 1/10W
R356	1-214-530-00	s	METAL 75 1% 1/8W
R377	1-215-425-00	s	METAL 1.5K 1% 1/6W
R412	1-216-675-11	s	METAL CHIP 10K 0.50% 1/10W
R419	1-216-121-00	s	METAL CHIP 1M 5% 1/10W
R426	1-249-400-11	s	CARBON 39 5% 1/4W
R427	1-249-400-11	s	CARBON 39 5% 1/4W
R428	1-249-397-11	s	CARBON 22 5% 1/4W
R526	1-249-400-11	s	CARBON 39 5% 1/4W
R527	1-249-400-11	s	CARBON 39 5% 1/4W
R528	1-249-397-11	s	CARBON 22 5% 1/4W
RV1	1-228-457-00	s	RES, ADJ, METAL 2K
RV2	1-228-457-00	s	RES, ADJ, METAL 2K
RV101	1-228-458-00	s	RES, ADJ, METAL 5K
RV102	1-228-456-00	s	RES, ADJ, METAL 1K
RV103	1-228-459-00	s	RES, ADJ, METAL 10K
RV104	1-228-460-00	s	RES, ADJ, METAL 20K
RV201	1-228-458-00	s	RES, ADJ, METAL 5K
RV202	1-228-456-00	s	RES, ADJ, METAL 1K
RV203	1-228-459-00	s	RES, ADJ, METAL 10K
RV204	1-228-460-00	s	RES, ADJ, METAL 20K
RV301	1-228-458-00	s	RES, ADJ, METAL 5K
RV302	1-228-456-00	s	RES, ADJ, METAL 1K
RV303	1-228-459-00	s	RES, ADJ, METAL 10K
RV304	1-228-460-00	s	RES, ADJ, METAL 20K

FRAME

Ref. No. or Q'ty	Part No.	SP	Description
	1-555-724-00	o	WIRE, GROUND
	1-563-223-11	s	CAP, DUST (6C+2P RECEPTACLE)
	1-946-217-11	o	HARNESS (CCU)
CN11	1-562-855-11	o	HOUSING, IL-M 6P
	1-564-092-11	o	CONTACT, FEMALE, IL-M, AWG24-28
CN101	1-560-163-00	s	PLUG, RF "R"
CN201	1-560-163-00	s	PLUG, RF "B"
CN301	1-560-163-00	s	PLUG, RF "G"
CN401	1-560-163-00	s	PLUG, RF "SYNC"
CN501	1-560-163-00	s	PLUG, RF "VF"
	1-946-219-11	o	HARNESS (FR POWER)
	1-535-072-00	o	CONTACT, FEMALE AWG18-24
CN5 (to MB-294 BOARD)			
	1-563-126-11	o	HOUSING, 24P
	1-563-115-11	o	CONTACT, FEMALE, AWG24-28
CN9	1-566-358-11	s	PIN, D-SUB CONNECTOR 50P
	1-564-774-11	o	CONTACT, AWG22-24
CN11	1-561-518-00	o	HOUSING, ILG 6P
	1-946-222-11	o	HARNESS (FAN)
FA1	1-541-611-21	s	FAN, DC
	1-946-227-11	o	HARNESS (D-SUB)
CN201 (to PS-227 BOARD)			
	1-562-211-11	o	HOUSING, VH, 3P
	1-562-210-11	s	CONTACT, FEMALE, AWG22-18
CN201 (to PS-228 BOARD)			
	1-563-126-11	o	HOUSING, 24P
	1-563-115-11	o	CONTACT, FEMALE, AWG24-28
CN203 (to PS-227 BOARD)			
	1-563-116-11	o	HOUSING, 4P
	1-563-115-11	o	CONTACT, FEMALE, AWG24-28
BK1	1-576-037-11	s	BREAKER, CIRCUIT
C1	1-161-043-00	s	CERAMIC 2200P 10% 50V
C2	1-161-043-00	s	CERAMIC 2200P 10% 50V
C3	1-161-043-00	s	CERAMIC 2200P 10% 50V
C4	1-161-043-00	s	CERAMIC 2200P 10% 50V
CN1 (to DP-118 BOARD)			
	1-563-116-11	o	HOUSING, 4P
	1-563-115-11	o	CONTACT, FEMALE, AWG24-28
CN1 (to DP-152 BOARD)			
	1-569-196-11	o	HOUSING, 3P
	1-569-194-11	o	CONTACT
CN2 (to DP-118 BOARD)			
	1-569-196-11	o	HOUSING, 3P
	1-569-194-11	o	CONTACT
CN2 (to DP-152 BOARD)			
	1-563-118-11	o	HOUSING, 8P
	1-563-115-11	o	CONTACT, FEMALE, AWG24-28
CN3	1-509-176-41	s	CONNECTOR, 3P, FEMALE "D-AUD 1/2 OUT"
CN4	1-509-176-41	s	CONNECTOR, 3P, FEMALE "D-AUD 3/4 OUT"
CN5	1-509-176-41	s	CONNECTOR, 3P, FEMALE "D-AUD 5/6 OUT"
CN6	1-509-176-51	s	CONNECTOR, 3P, FEMALE "A-AUD 1 OUT"
CN6 (to MB-294 BOARD)			
	1-563-120-11	o	HOUSING, 12P
	1-563-115-11	o	CONTACT, FEMALE, AWG24-28

Please see pages D-13 to D-15 for the part numbers of capacitors and resistors that are not listed in the parts list.

(FRAME)

Ref. No. or Q'ty	Part No.	SP	Description
CN7	1-509-176-51	s	CONNECTOR, 3P, FEMALE "A-AUD 2 OUT"
CN7	1-563-118-11	o	HOUSING, 8P
	1-563-115-11	o	CONTACT, FEMALE, AWG24-28
CN8	⚠1-580-375-11	s	INLET 3P "AC IN"
CN71	1-561-518-00	o	HOUSING, ILG 6P
	1-562-855-11	o	HOUSING, IL-M 6P
	1-564-092-11	o	CONTACT, FEMALE, IL-M, AWG24-28
CN101 (to PS-228 BOARD)			
	⚠1-562-211-11	o	HOUSING, VH, 3P
	⚠1-562-210-11	s	CONTACT, FEMALE, AWG22-18
CN202 (to PS-227 BOARD)			
	1-563-117-11	o	HOUSING, 6P
	1-563-115-11	o	CONTACT, FEMALE, AWG24-28
CN202 (to PS-228 BOARD)			
	1-563-118-11	o	HOUSING, 8P
	1-563-115-11	o	CONTACT, FEMALE, AWG24-28
CN204 (to PS-227 BOARD)			
	1-563-118-11	o	HOUSING, 8P
	1-563-115-11	o	CONTACT, FEMALE, AWG24-28
CN605 (to LF-22 BOARD)			
	1-569-195-11	s	HOUSING, 2P
SW1	⚠1-552-060-21	s	SWITCH, ROCKER(AC POWER)
SW2	⚠1-552-060-21	s	SWITCH, ROCKER(AC POWER)

PACKING MATERIALS & SUPPLIED ACCESSORIES

Ref. No. or Q'ty	Part No.	SP	Description
1pc	A-7515-188-A	o	MOUNTED CIRCUIT BOARD, EX-252
1pc	X-2146-504-1	o	ANGLE ASSY(2U, HD BLACK), RACK
2pcs	7-682-275-09	s	SCREW +K 5X10
1pc	⚠1-506-411-21	s	ADAPTOR, AC PLUG 3P-2P
1pc	⚠1-557-377-11	s	CORD, POWER
1pc	⚠1-556-760-11	s	CORD, POWER (3 CORE)
1pc	1-561-518-00	o	HOUSING, ILG 6P, FEMALE
2pcs	1-563-029-21	s	CONNECTOR, 3P
4pcs	7-627-556-37	s	SCREW,PRECISION +P2.6X4 TYPE 1
4pcs	2-297-913-00	s	WASHER (DIA.5), ORNAMENTAL
1pc	2-990-242-01	o	HOLDER (B), PLUG
4pcs	7-682-377-04	s	SCREW +RK 5X14
8pcs	7-682-662-09	s	SCREW +PS 4X10
4pcs	1-161-043-00	s	CERAMIC 2200P 10% 50V

Please see pages D-13 to D-15 for the part numbers
of capacitors and resistors that are not listed in
the parts list.

SECTION E
CHANGED PARTS

AU-135 BOARD

Serial No. Up to 10399

Ref. No. or Q'ty	Parts No.	SP	Description
D8	8-719-800-76	s	DIODE 1SS226

PS-227 BOARD

Serial No. Up to 10199

Ref. No. or Q'ty	Parts No.	SP	Description
R205	1-249-425-11	s	CARBON 4.7k 5% 1/4W
R206	1-215-418-00	s	METAL 750 1% 1/6W

Serial No. Up to 10399

Ref. No. or Q'ty	Parts No.	SP	Description
D216	8-719-900-58	s	DIODE GL-5PG95
D227	8-719-921-01	s	DIODE EBR5534S

PS-228 BOARD

Serial No. Up to 10299

Ref. No. or Q'ty	Parts No.	SP	Description
Q101	8-729-819-82	s	TRANSISTOR 2SC3460-L

Serial No. Up to 10399

Ref. No. or Q'ty	Parts No.	SP	Description
R210	1-249-431-11	s	CARBON 15k 5% 1/4W
R211	1-249-431-11	s	CARBON 15k 5% 1/4W
R217	1-249-431-11	s	CARBON 15k 5% 1/4W
R218	1-249-431-11	s	CARBON 15k 5% 1/4W

VA-99 BOARD

Serial No. Up to 10199

Ref. No. or Q'ty	Parts No.	SP	Description
C103	1-131-377-00	s	TANTALUM 10µF 10% 10V
C203	1-131-377-00	s	TANTALUM 10µF 10% 10V
C303	1-131-377-00	s	TANTALUM 10µF 10% 10V
R412	1-215-445-00	s	METAL 10k 1% 1/6W

HDFR-300 (J, E)
3-166-523-04

Sony Corporation
Camera Products Group

Printed in Japan
1992. 4 11
© 1990
Published by B&P Marketing Group